FabricAir

Type 06

Installation Manual

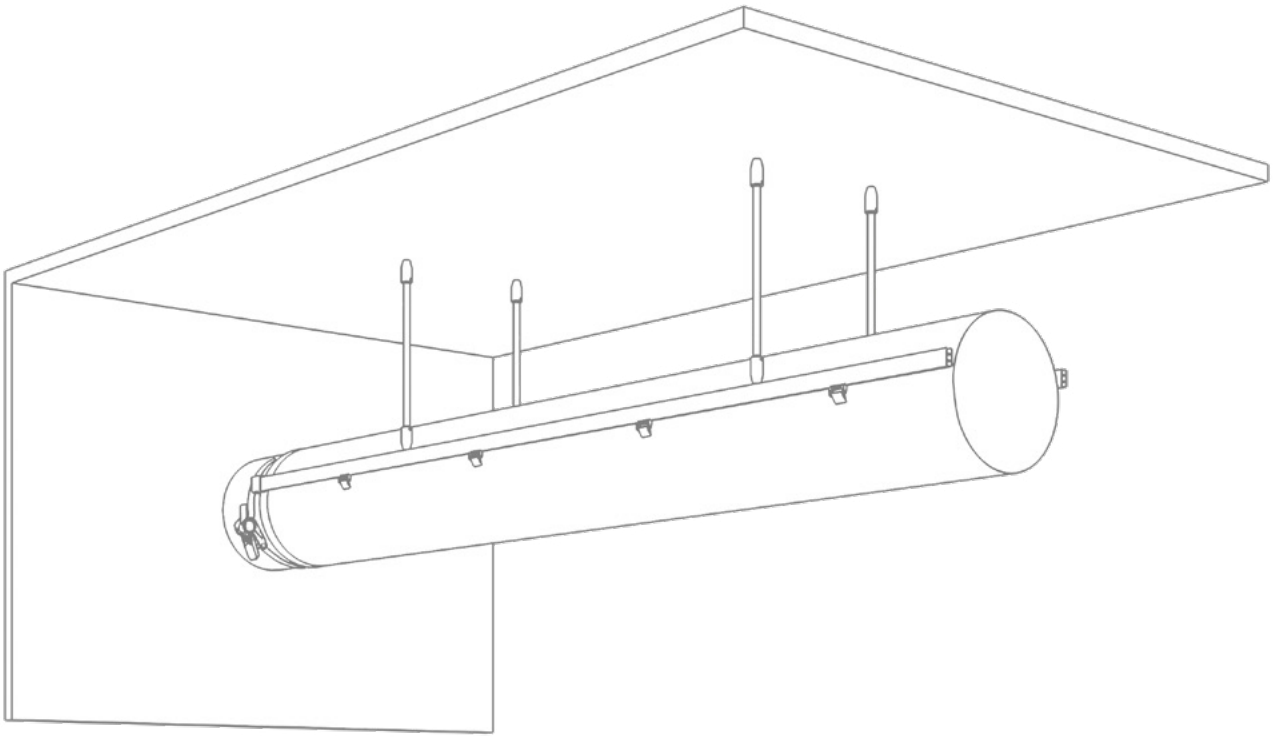

Type 06 suspension is compatible with classic ducts without shape retaining hardware.

Type 06 suspension is a rigid, double H-Rail suspension with aluminum rod supports connecting the H-Rail to the ceiling structure.

Animation

Content

1.0 OPENING PACKAGE 3

1.1 Understanding components table 4

1.2 Type 06 suspension components 5

2.0 SUSPENSION INSTALLATION 6

2.1 Mounting H-Rail 6

2.2 Connecting profiles 8

2.3 Branches 10

2.4 Detailed suspension installation 10

3.0 INSTALLING THE FABRIC 11

3.1 Connection to sheet metal part with fixing strap 11

3.2 Fixing straps 11

3.3 Installation of duct on H-Rail 12

1.0 OPENING PACKAGE

Video

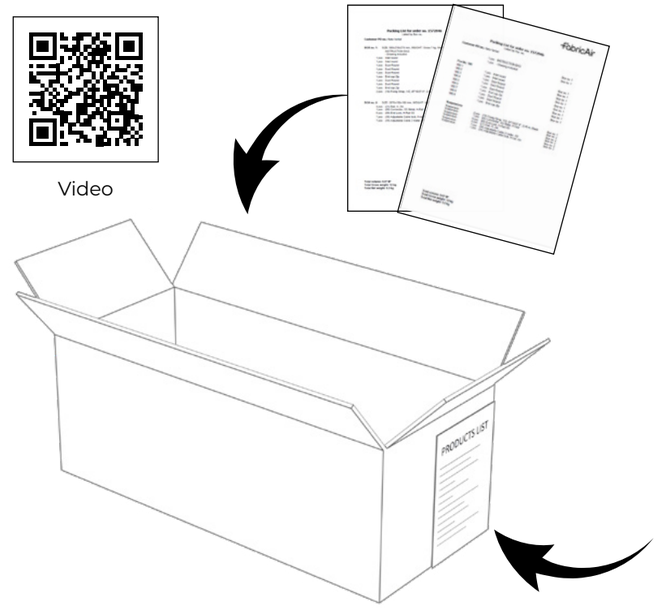

Box 1 includes all project documentation:

- System Drawing(s)
- Installation Guide
- Packing List (by box)
- Packing List (by positions)

Box number and contents list visible on external box label.

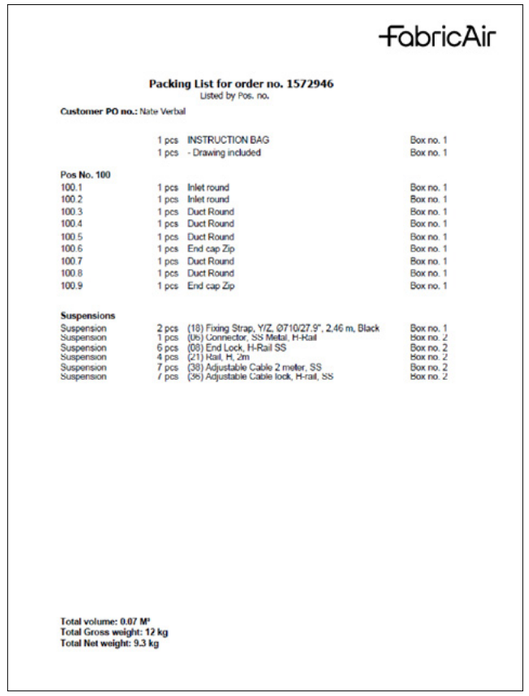

FabricAir

Packing List for order no. 1572946
Listed by Pos. no.

Customer PO no.: Nate Verbal

	1 pcs	INSTRUCTION BAG	Box no. 1
	1 pcs	- Drawing included	Box no. 1
Pos No. 100			
100.1	1 pcs	Inlet round	Box no. 1
100.2	1 pcs	Inlet round	Box no. 1
100.3	1 pcs	Duct Round	Box no. 1
100.4	1 pcs	Duct Round	Box no. 1
100.5	1 pcs	Duct Round	Box no. 1
100.6	1 pcs	End cap Zip	Box no. 1
100.7	1 pcs	Duct Round	Box no. 1
100.8	1 pcs	Duct Round	Box no. 1
100.9	1 pcs	End cap Zip	Box no. 1
Suspensions			
Suspension	2 pcs	(18) Fixing Strap, Y/Z, Ø710/27.9", 2.46 m, Black	Box no. 1
Suspension	1 pcs	(06) Connector, SS Metal, H-Rail	Box no. 2
Suspension	6 pcs	(08) End Lock, H-Rail SS	Box no. 2
Suspension	4 pcs	(21) Rail, H, 2m	Box no. 2
Suspension	7 pcs	(38) Adjustable Cable 2 meter, SS	Box no. 2
Suspension	7 pcs	(36) Adjustable Cable lock, H-rail, SS	Box no. 2

Total volume: 0.07 M³
Total Gross weight: 12 kg
Total Net weight: 9.3 kg

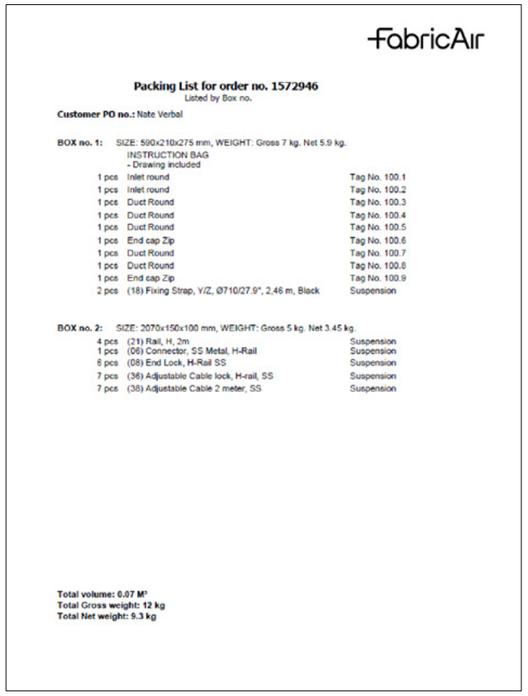

FabricAir

Packing List for order no. 1572946
Listed by Box no.

Customer PO no.: Nate Verbal

BOX no. 1: SIZE: 590x210x275 mm, WEIGHT: Gross 7 kg. Net 5.9 kg.

	INSTRUCTION BAG - Drawing included	
1 pcs	Inlet round	Tag No. 100.1
1 pcs	Inlet round	Tag No. 100.2
1 pcs	Duct Round	Tag No. 100.3
1 pcs	Duct Round	Tag No. 100.4
1 pcs	Duct Round	Tag No. 100.5
1 pcs	End cap Zip	Tag No. 100.6
1 pcs	Duct Round	Tag No. 100.7
1 pcs	Duct Round	Tag No. 100.8
1 pcs	End cap Zip	Tag No. 100.9
2 pcs	(18) Fixing Strap, Y/Z, Ø710/27.9", 2.46 m, Black	Suspension

BOX no. 2: SIZE: 2070x150x100 mm, WEIGHT: Gross 5 kg. Net 3.45 kg.

4 pcs	(21) Rail, H, 2m	Suspension
1 pcs	(06) Connector, SS Metal, H-Rail	Suspension
6 pcs	(08) End Lock, H-Rail SS	Suspension
7 pcs	(36) Adjustable Cable lock, H-rail, SS	Suspension
7 pcs	(38) Adjustable Cable 2 meter, SS	Suspension

Total volume: 0.07 M³
Total Gross weight: 12 kg
Total Net weight: 9.3 kg

- There are two packing lists – by box and by position. Each box may contain either suspension components or ducting. Each duct section/component has a Tag number (Tag No. XXX.X). Suspension elements have part ID numbers. Example: (21) H-Rail, 2 m. In this case, (21) is part ID.
- Tag numbers are marked in assembly sequence. Assembly of ducting should start with Tag No. XXX.1 and continue accordingly.

1.1 Understanding components table (located on system drawing)

COMPONENTS								
Tag#	Fabric	Color	Flow model			Suspension		
			Primary	Placement	Secondary	Type	Strap length	Material
350404600025	Combi 70	Black 3004			FabFlow		0	GV
100.1	Combi 70	Black 3004			FabFlow		0	GV
100.2	Combi 70	Black 3004	SonicFlow SonicFlow SonicFlow SonicFlow SonicFlow	2:00 3:00 4:00 5:00 6:00	FabFlow	Type 01 AiO	50 mm [2"]	GV

THE CHART SHOWN ABOVE IS AN EXAMPLE

Tag#: the unique number for that section, this is the identifying/unique number for that section.

Tag 3504..##..25: this part is the FabricAir flow straightener that helps manage turbulence and can be zipped into any joint.

Fabric: the fabric selected for this project.

Color: the color selected (standard meaning to select from the standard color chart for that fabric).

Flow model primary: primary dispersion method.

Placement: position of the holes; direction of airflow based on looking in the direction of airflow with the air hitting you from behind.

Flow model secondary: FabFlow for permeable fabrics.

Suspension type: the suspension model selected for the project.

Strap length: the length of the strap from the top of the duct to the suspension.

1.2 Type 06 suspension components (located on packing lists)

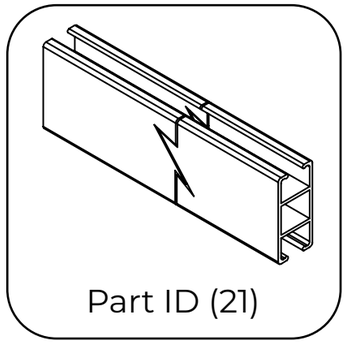

H-Rail profile

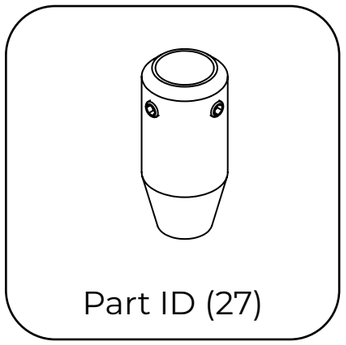

Rod end connector

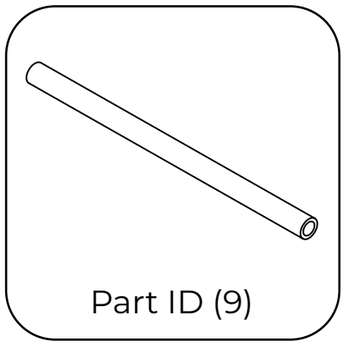

Rod

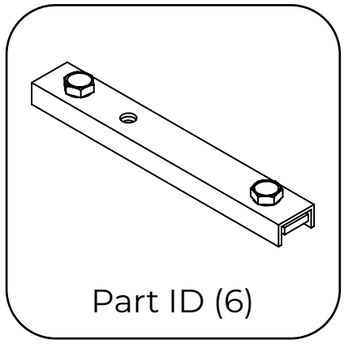

H-Rail connector

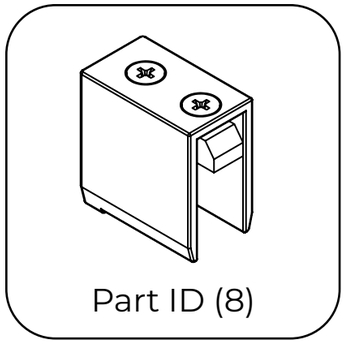

H-Rail endcap

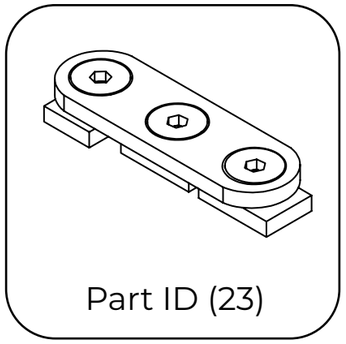

H-Rail tee connector

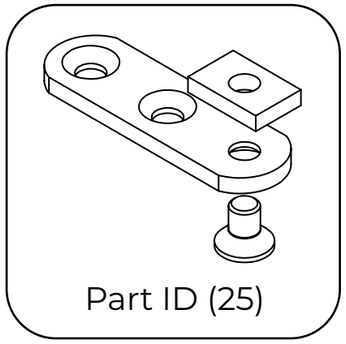

H-Rail ceiling connector

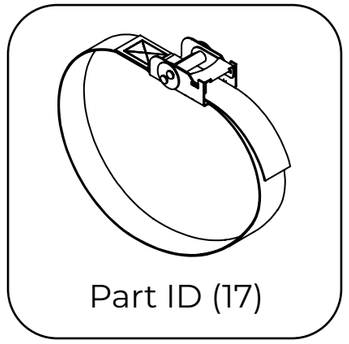

Fixing strap for duct Ø < 508 mm [20"]

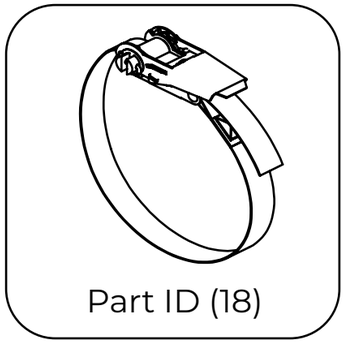

Fixing strap for duct Ø > 508 mm [20"]

2.0 SUSPENSION INSTALLATION

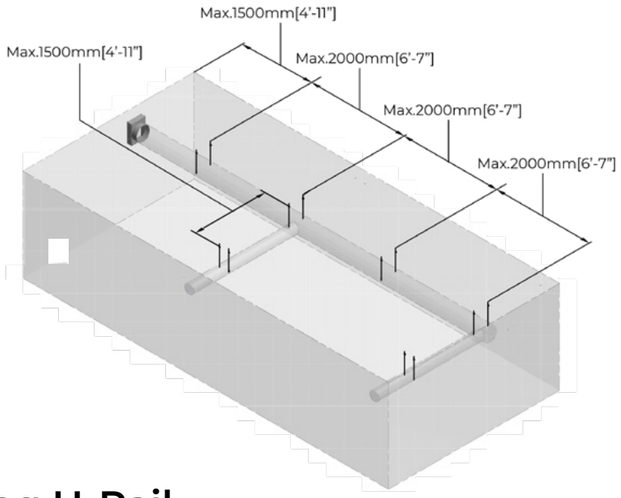

Video

2.1 Mounting H-Rail

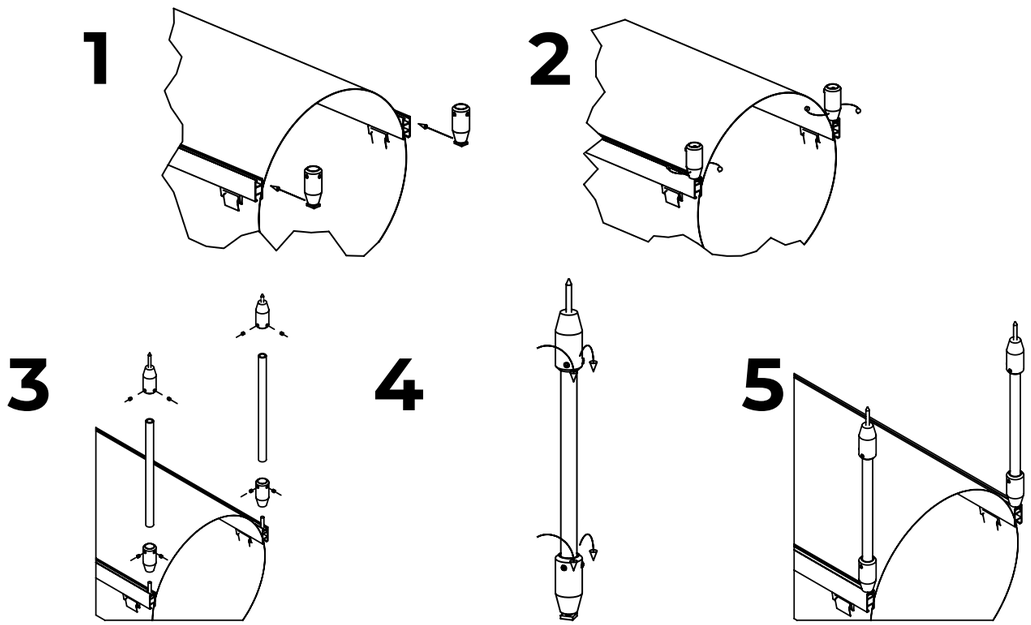

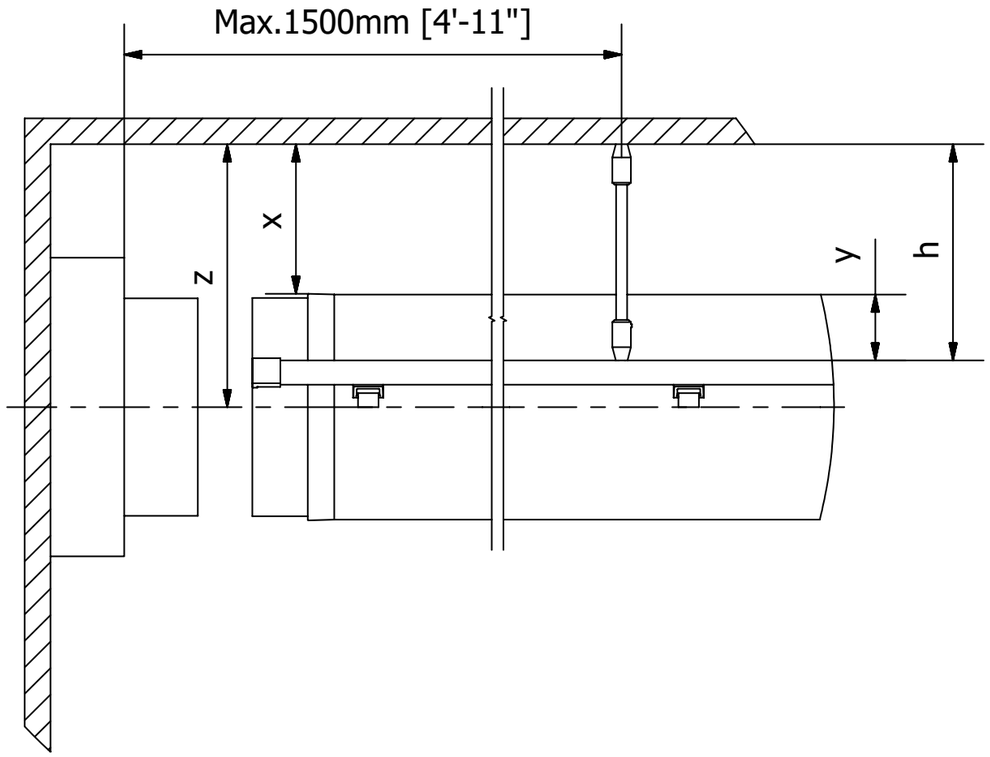

Rods are fastened to each connector using set screws (3 mm hex key).

Aluminum rods must be cut to length on-site by the contractor/ installer.

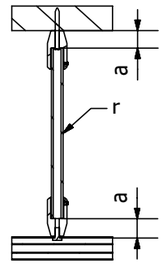

r = h - 2a

h = x - y

x = z - 1/2 d

a = 22 mm

Y classic = 63 mm [2.5"]

Y all-in-one = 83 mm [3.25"]

Strap lengths may be extended on Type 06 suspension, as needed to allow ducts to hang more than 50 mm [2"] below ceiling.

NOTE! Hardware quantities for vertical hangers are calculated based on 2 m [6'-7"] spacing. Installer must request additional hardware if vertical anchor spacing is to be less than 2 m [6'-7"].

Standard strap length for the 3 possible options:

classic: S = 30 mm [1.2"] minimum length;

All-in-One / Internal 360° Hoops: S = 50 mm [2"] minimum length.

2.2 Connecting profiles

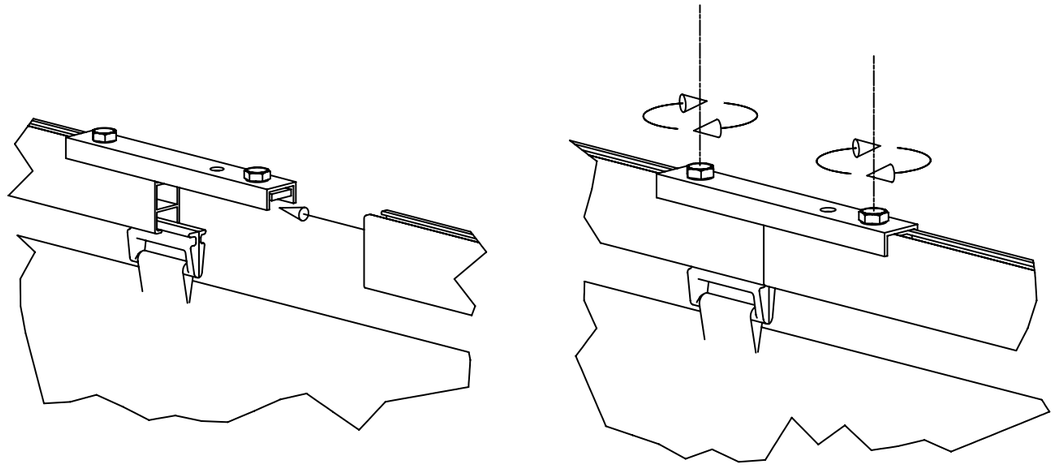

- H-Rail pieces are joined together using a metal connector.
- Duct will have sliders to slide into H-Rail at appropriate locations.
- Systems with elbows are provided with factory-bent H-Rail sections, to match the exact angle necessary for supporting the elbow.

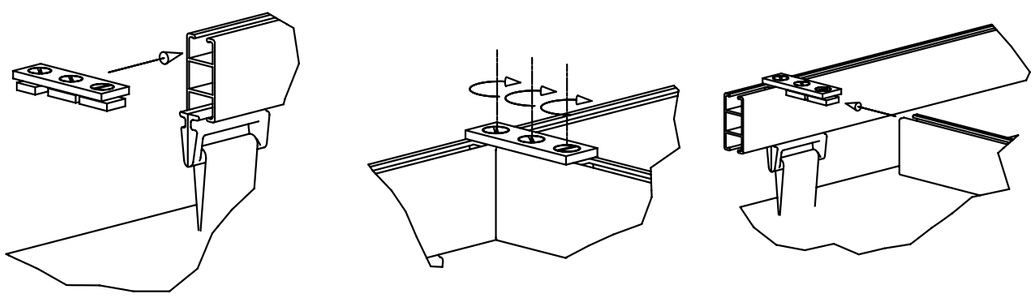

- H-Rail pieces are joined together using a metal connector.
- Connector secures to H-Rail with hex-bolts (3 mm).
- Duct will have sliders or a bulb edge to slide into H-Rail at appropriate locations.
- Rails can be bent to the exact angle needed to suit elbows in FabricAir duct system.
- Aluminum rods must be cut to length on-site by the contractor/installer.

2.3 Branches

Top-aligned

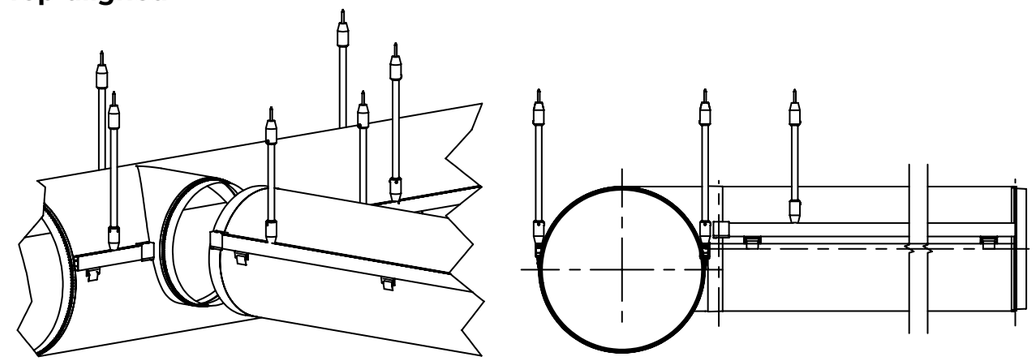

Center-aligned

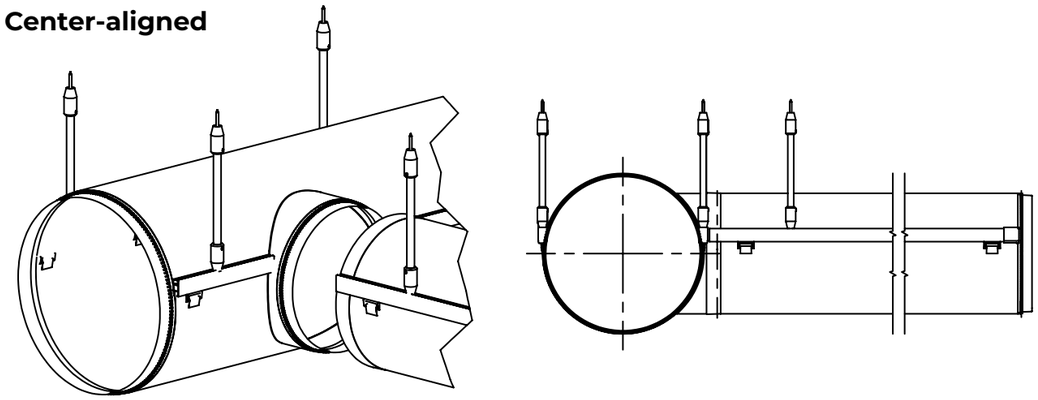

Bottom-aligned

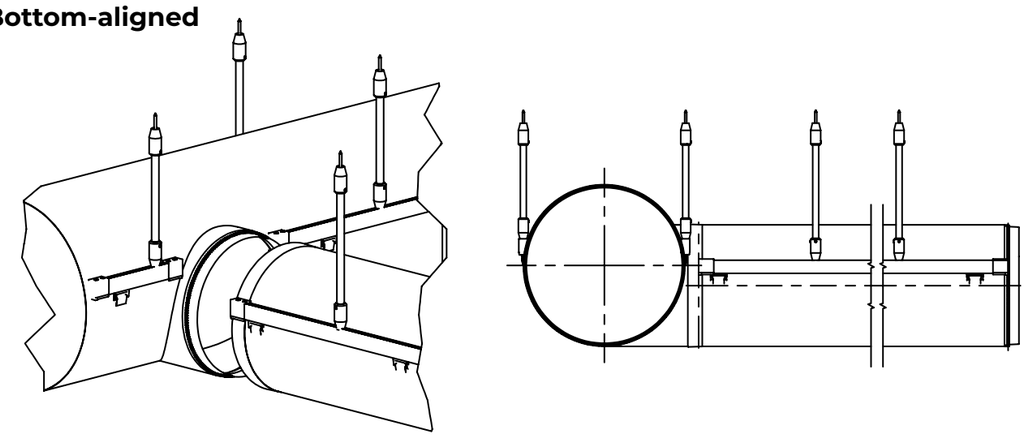

Multiple alignment can also be accomplished with extended straps.

Extended straps must be decided upon prior to manufacturing/order placement

2.4 Detailed suspension installation

Use QR code for more detailed information for each type.

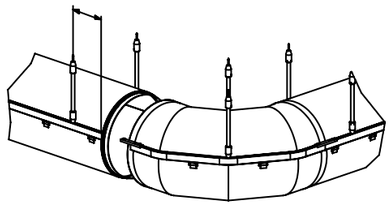

Bendings and elbows
All degrees and sizes

Drawings

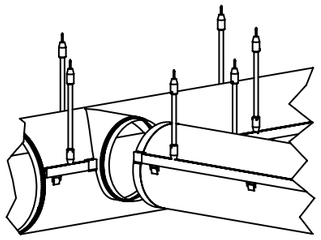

Branches
Top/center/bottom aligned

Drawings

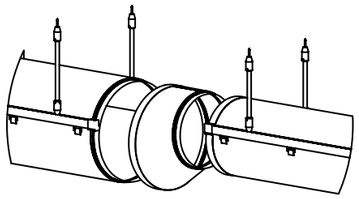

Reductions
Top/center/bottom aligned

Drawings

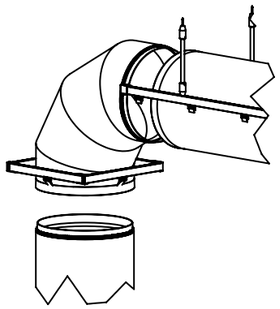

Vertical duct suspension methods

Drawings

3.0 HANGING THE FABRIC

3.1 Connection to sheet metal part with fixing strap

	Basic inlet	Cover inlet	Smart inlet
Min. metal duct length required	50 mm [2"]	50 mm [2"]	75 mm [3"]
Inlet length	Min. 50 mm [2"] Std. 100 mm [4"]	Min. and std. 100 mm [4"]	Min. and std. 100 mm [4"]

Basic inlet

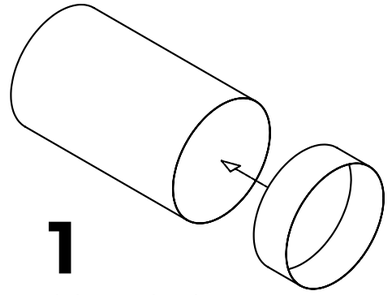

1
Put inlet on the duct

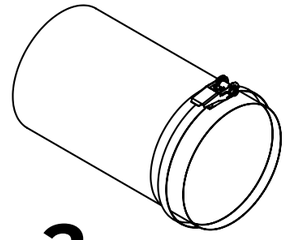

2
Put and tighten the fixing strap

Cover inlet

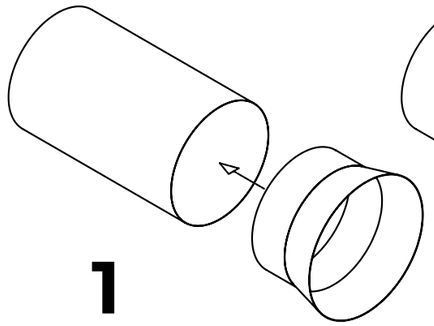

1
Put inlet on the duct

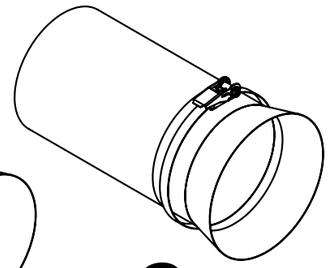

2
Put and tighten the fixing strap

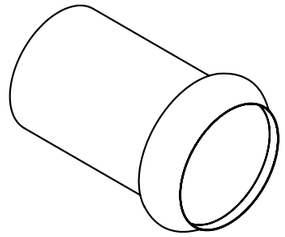

3
Close the cover

Smart inlet

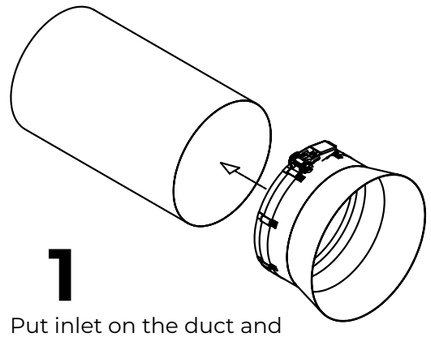

1
Put inlet on the duct and tighten the fixing strap

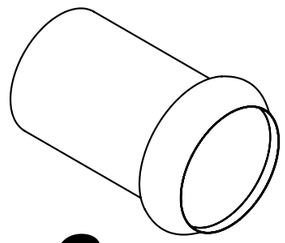

2
Close the cover

3.2 Fixing straps

Part ID (17) Duct Ø < 510 mm [20"]

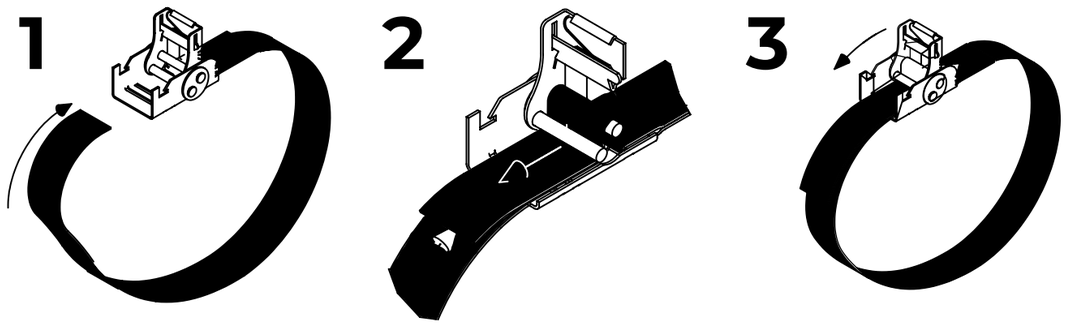

Part ID (18) Duct Ø >= 510 mm [20"]

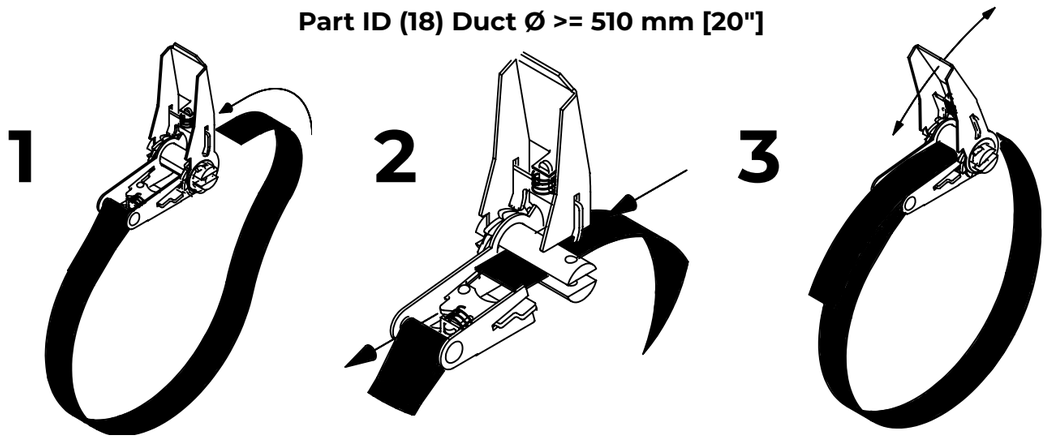

3.3 Installation of duct on H-Rail

1

Hang ducting first

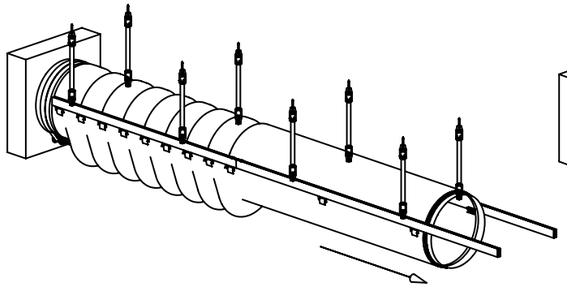

2

Stretch the duct

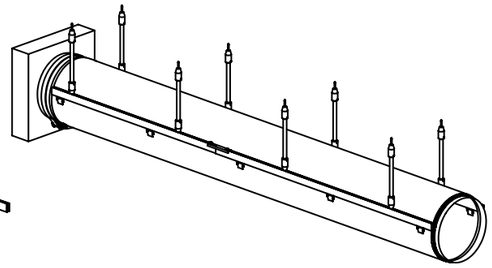

3

Insert hangers in the rail

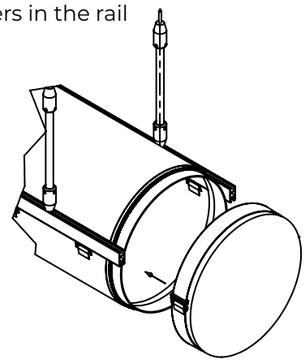

4

Slide endcap to the end of the duct. Zip it

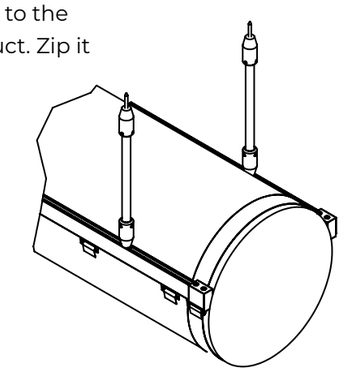

5

Secure duct by inserting H-Rail endcap

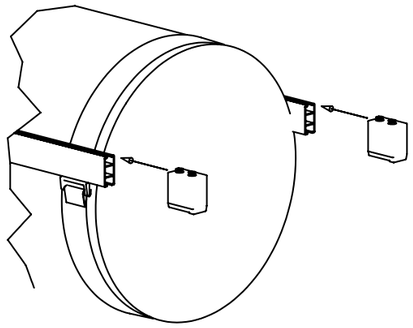

6

Secure H-Rail endcap by turning bolt clockwise

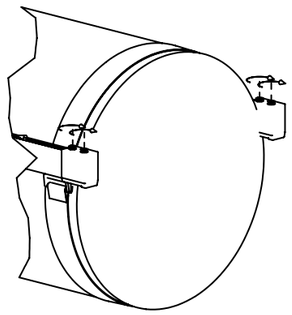

smart air
solutions.

fabricair.com/contacts/

All rights reserved to FabricAir®, 2024.
The latest version can be downloaded
from fabricair.com
210104166-017 (2024-MAR ENG)