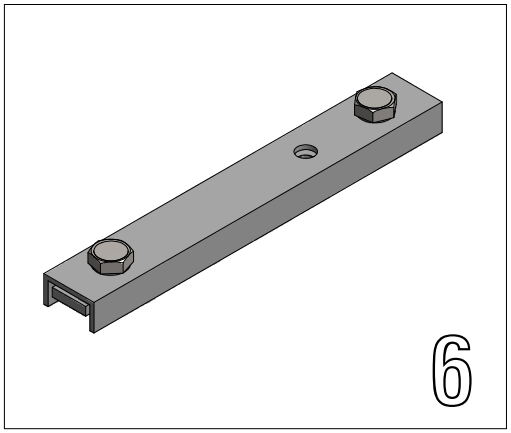

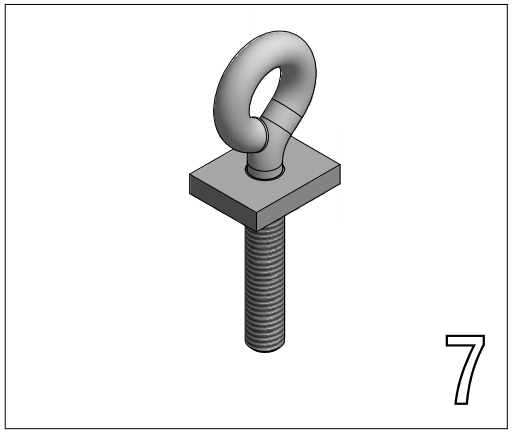

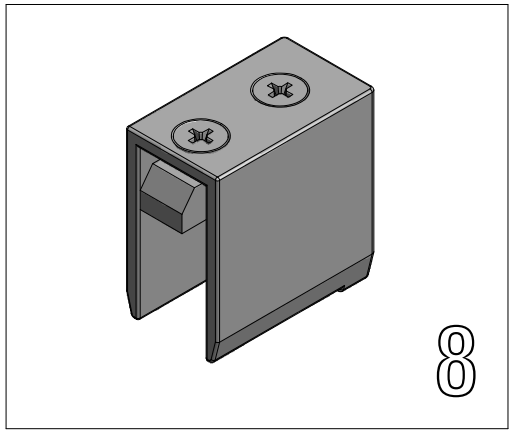

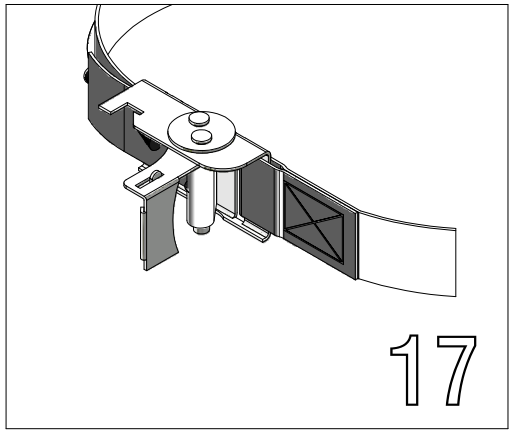

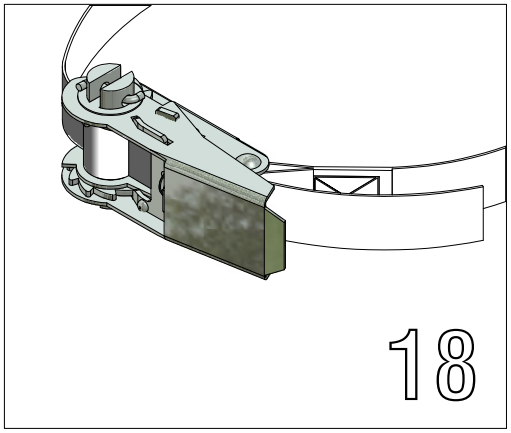

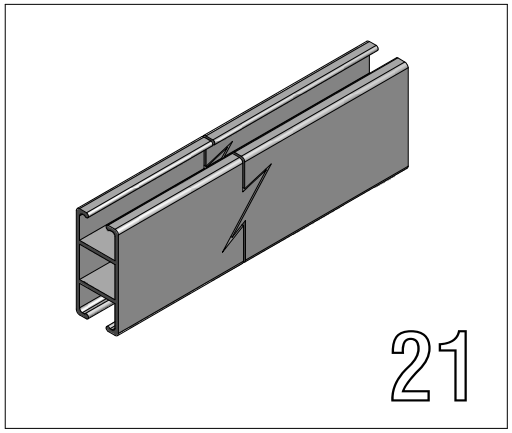

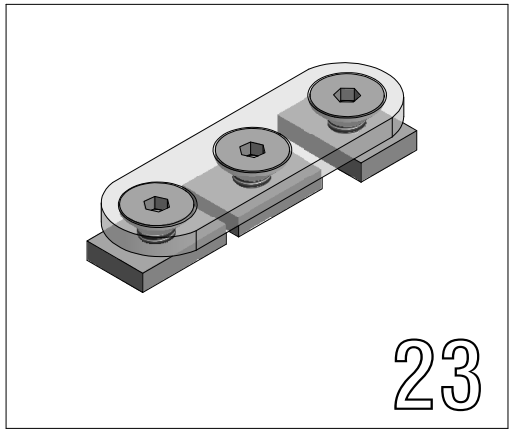

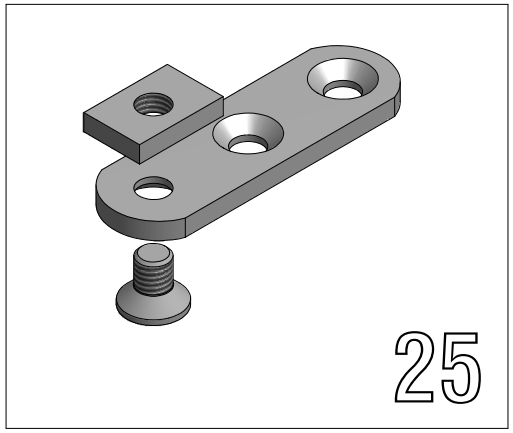

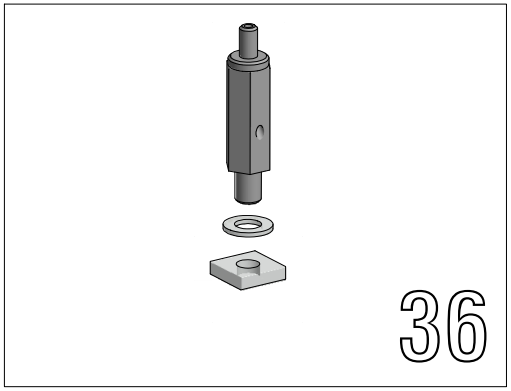

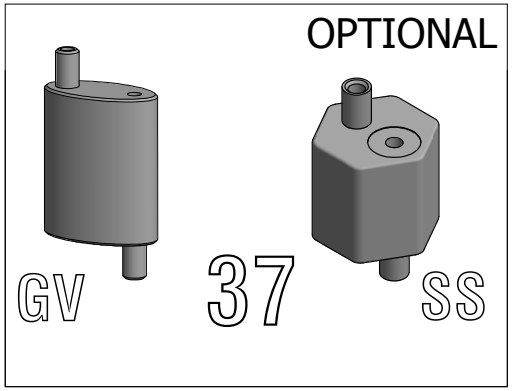

08.01

Type 8 and type 8 all in one ,Standard Parts

FabricAir® Installation Drawing

2003-0801-000 (2020-JUL)

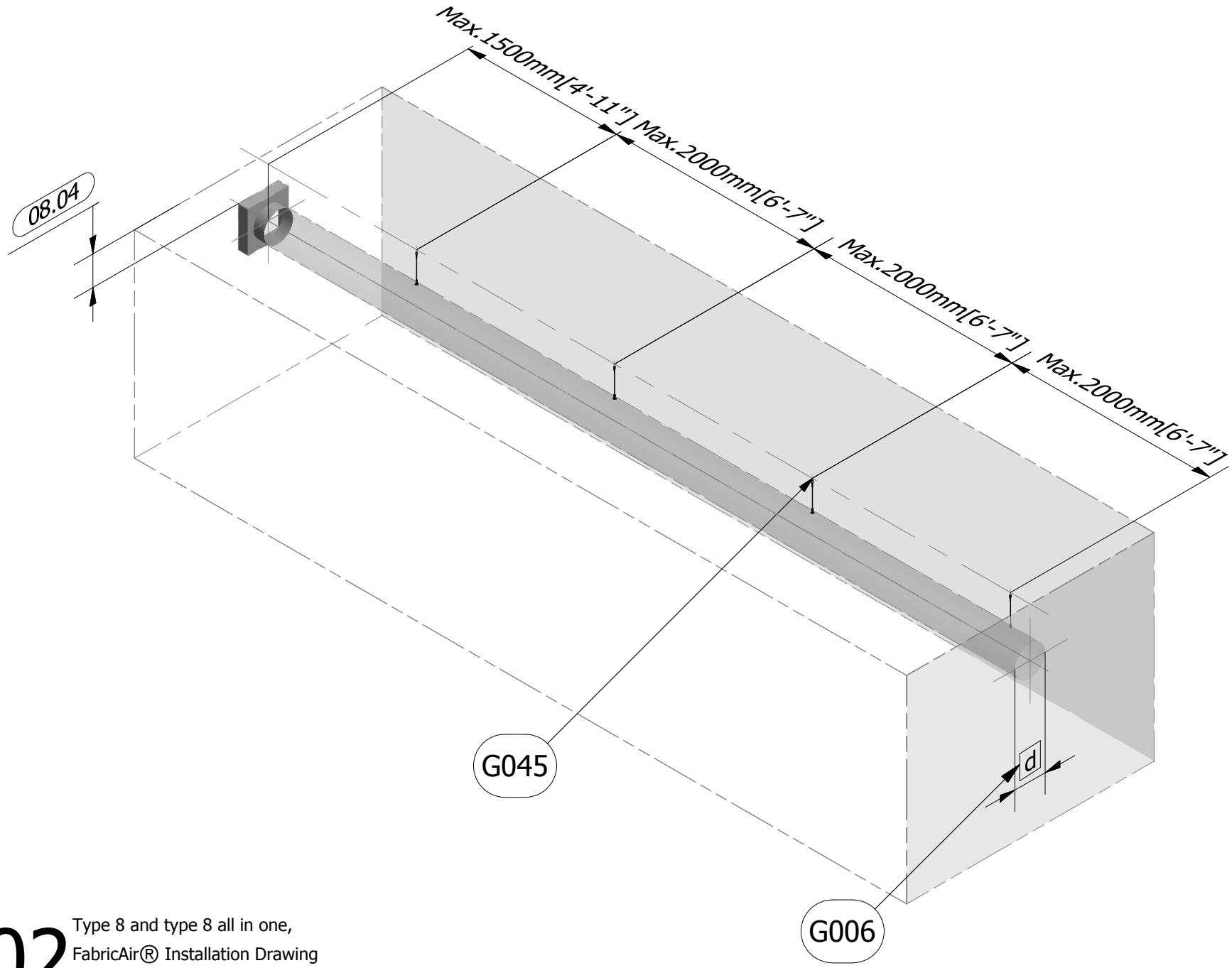

08.02

Type 8 and type 8 all in one,
FabricAir® Installation Drawing
2003-0802-000 (2020-JUL)

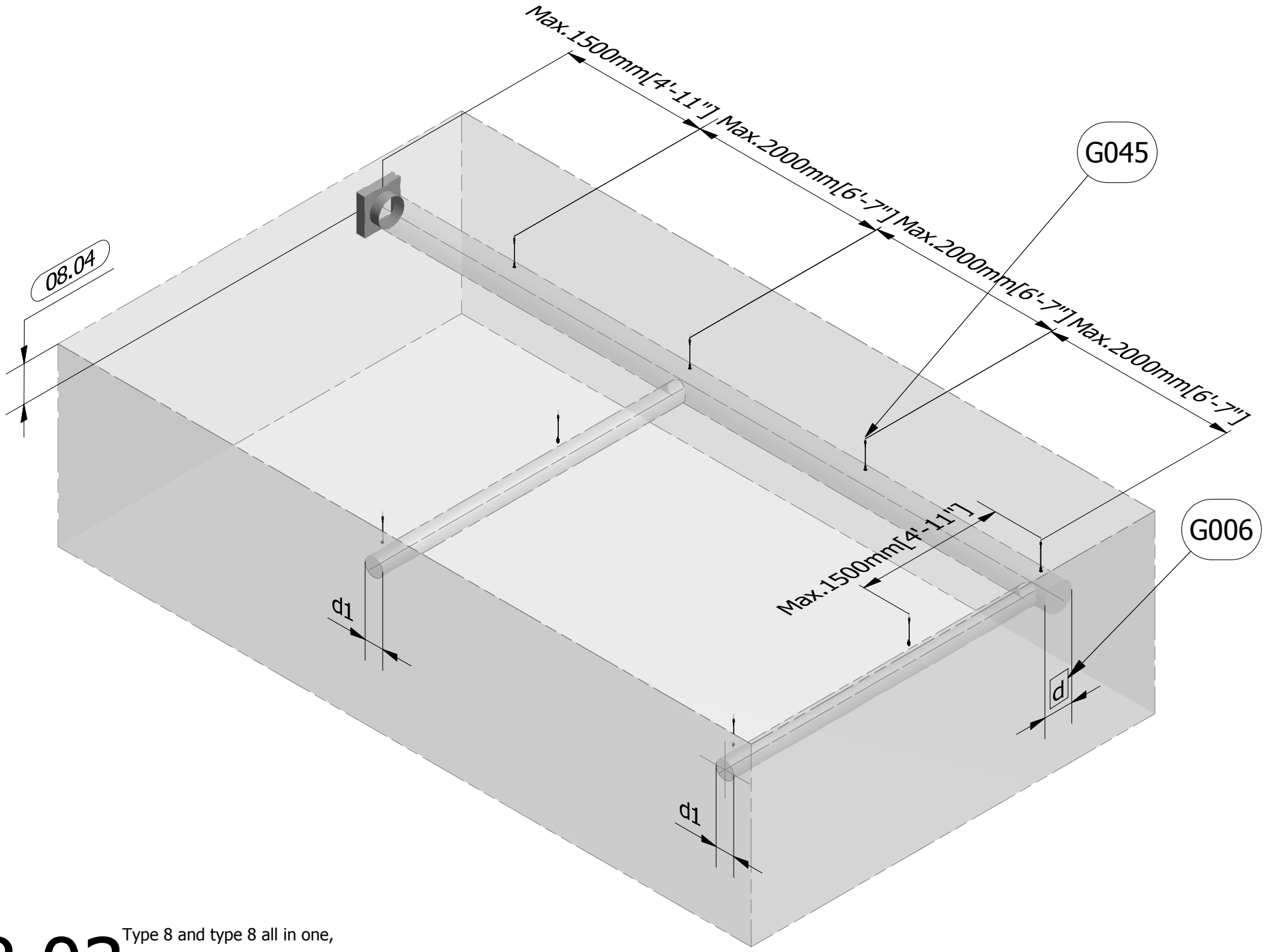

08.03

Type 8 and type 8 all in one,
FabricAir® Installation Drawing
2003-0803-000 (2020-JUL)

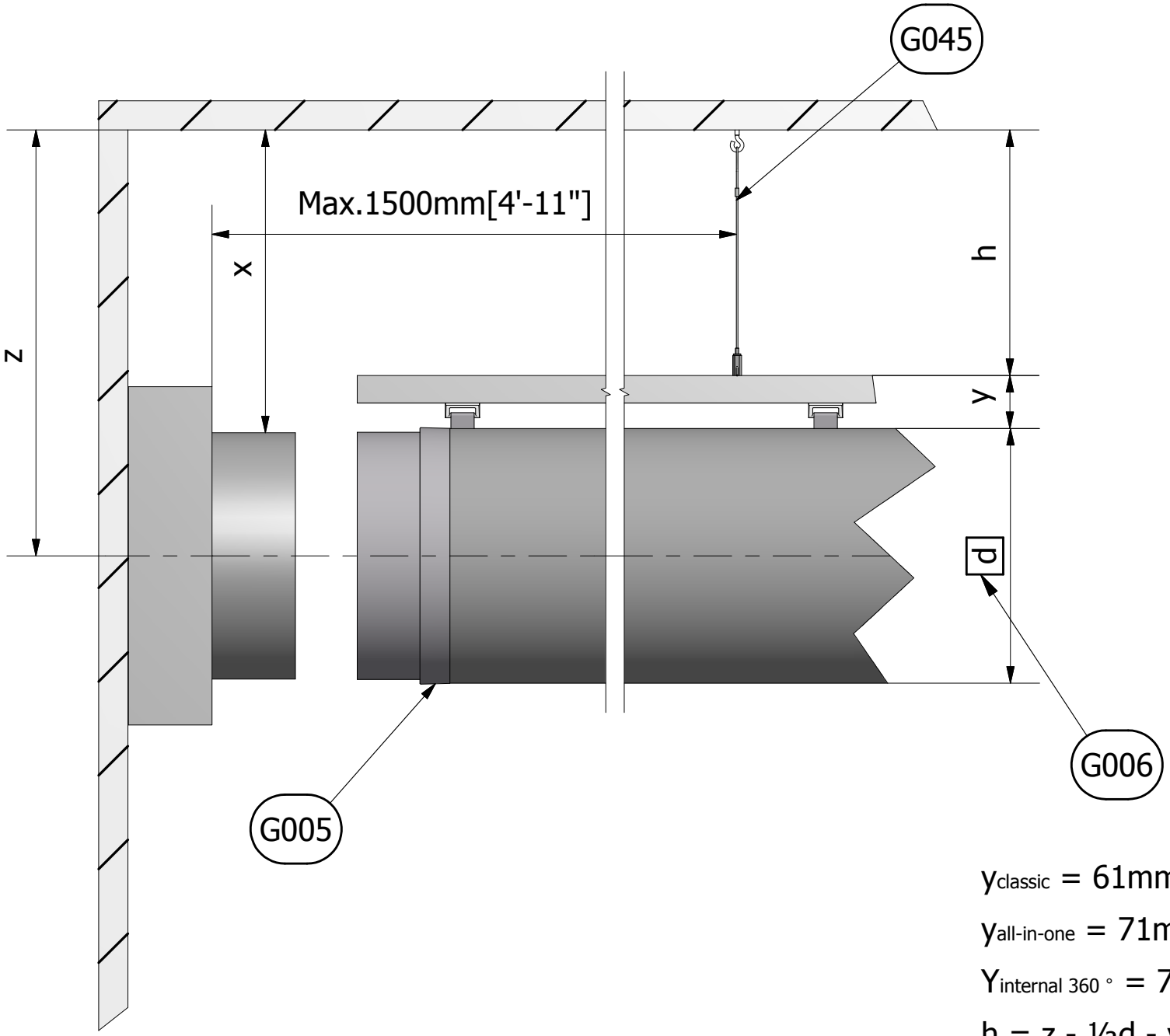

$y_{classic}$ = 61mm [0'-2.40"]

$y_{all\text{-}in\text{-}one}$ = 71mm [0'- 2.80"]

$Y_{internal\ 360\ °}$ = 71mm [0'- 2.80"]

h = z - ½d - y

h = x - y

Type 8 and type 8 All-in-one,
FabricAir® Installation Drawing
2003-0804-000 (2020-JUL)

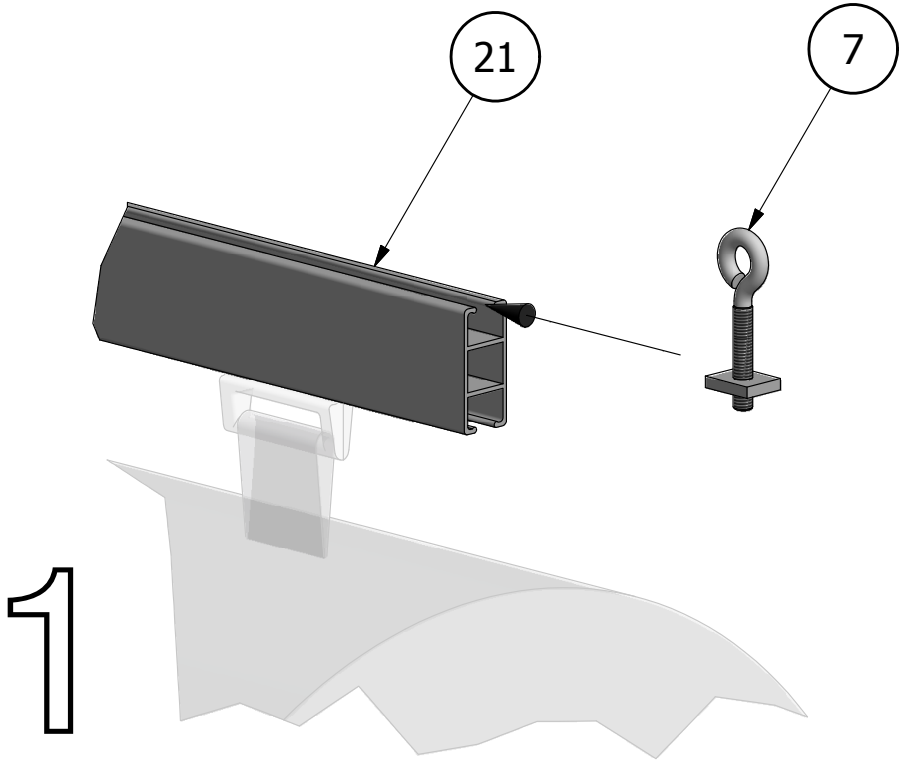

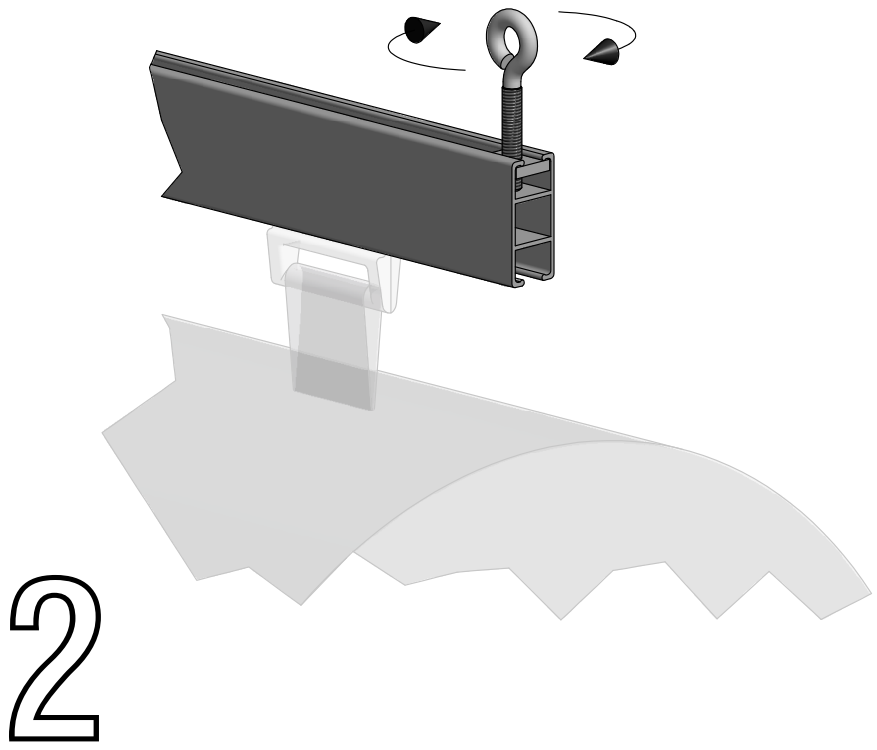

08.05

Type 8 and type 8 All-in-one,
FabricAir® Installation Drawing
2003-0805-000 (2014-FEB)

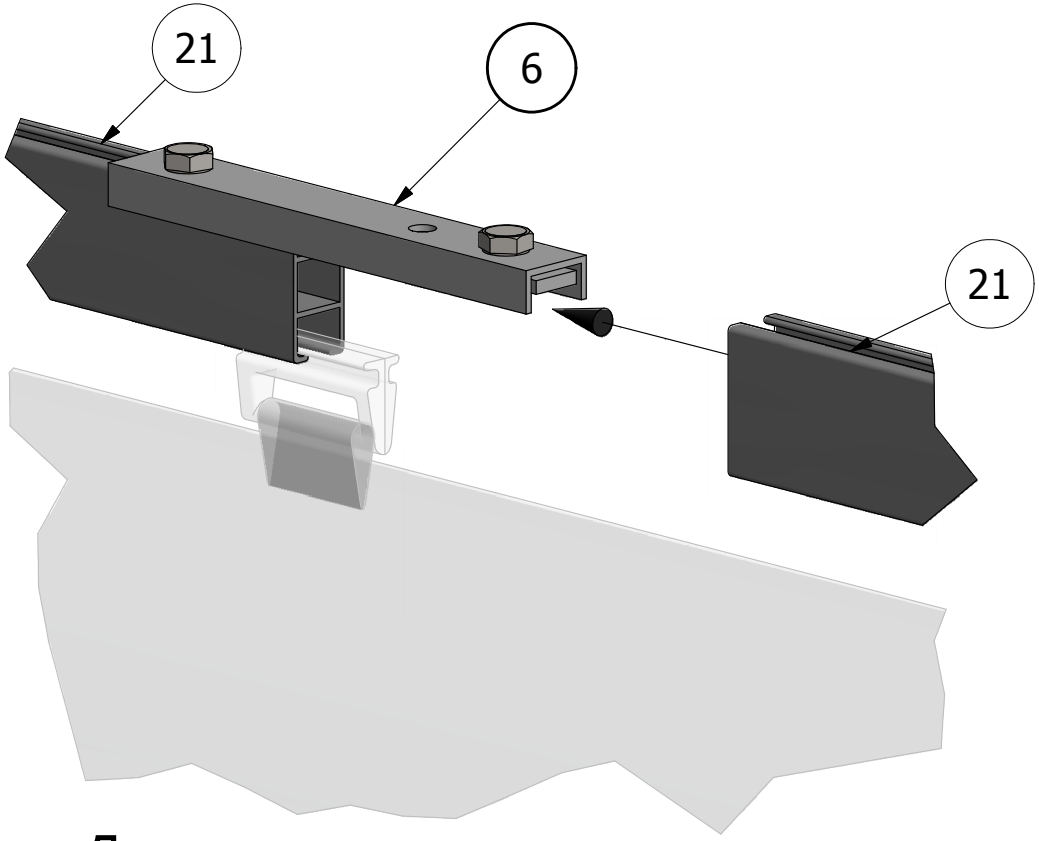

1

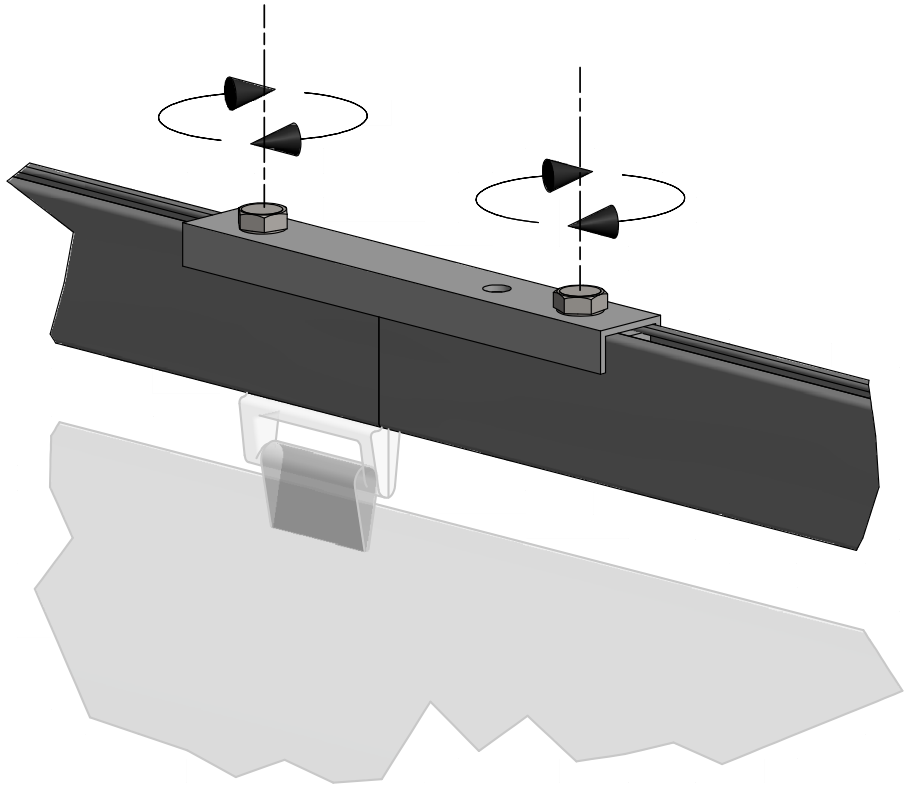

2

08.06

Type 8 and type 8 all in one,
FabricAir® Installation Drawing
2003-0806-000 (2019-SEP)

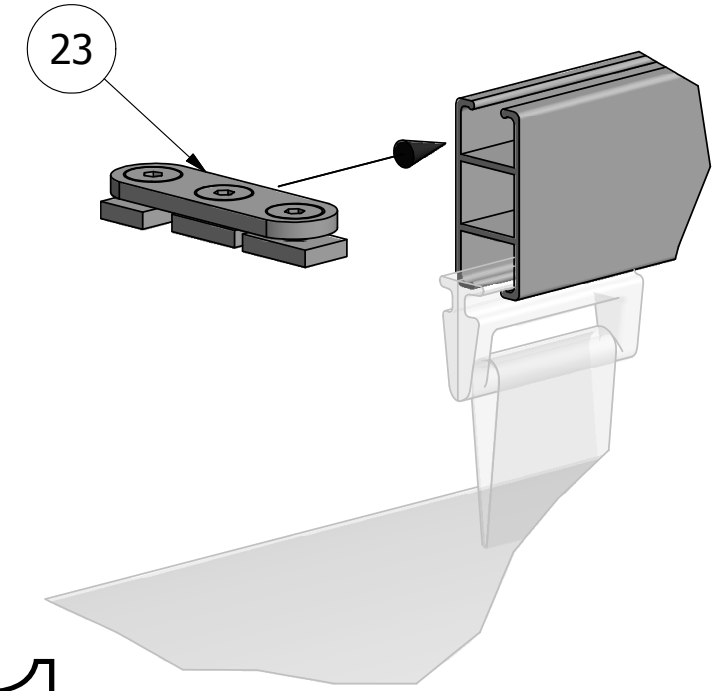

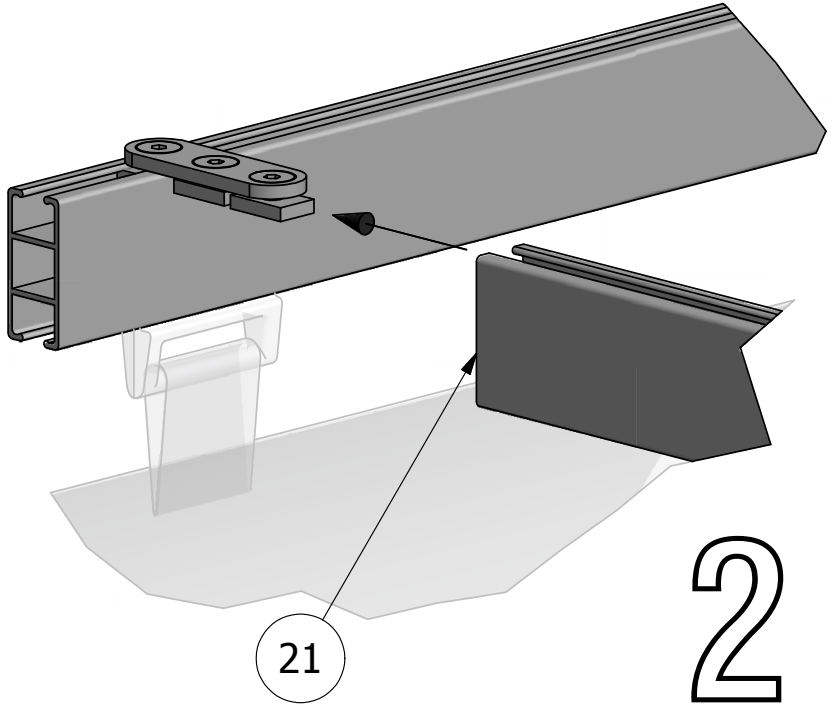

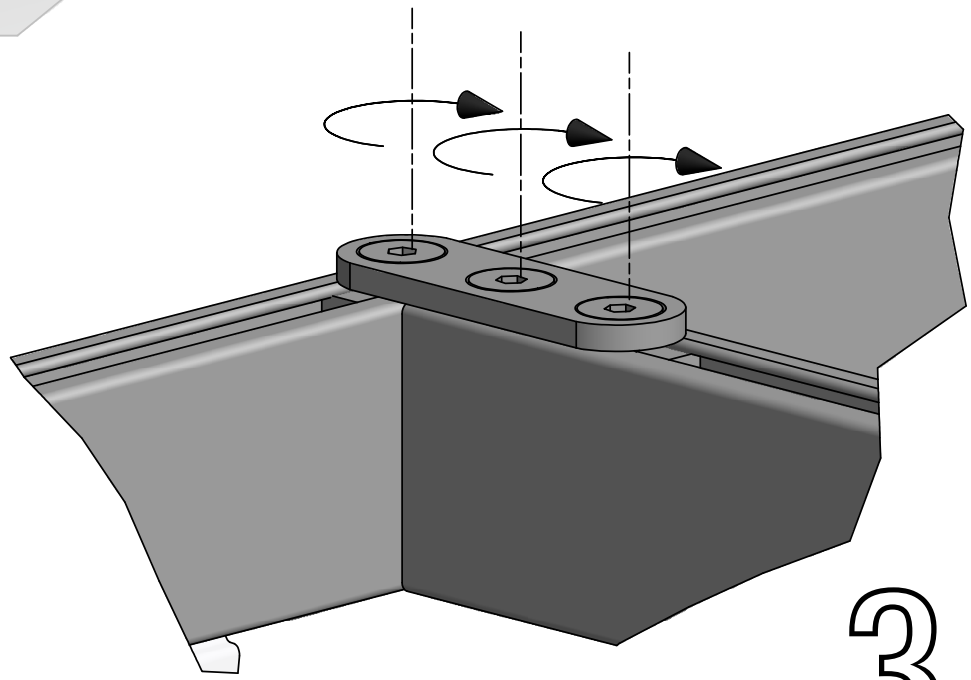

08.07

Type 8 and type 8 all in one,
FabricAir® Installation Drawing
2003-0807-000 (2020-SEP)

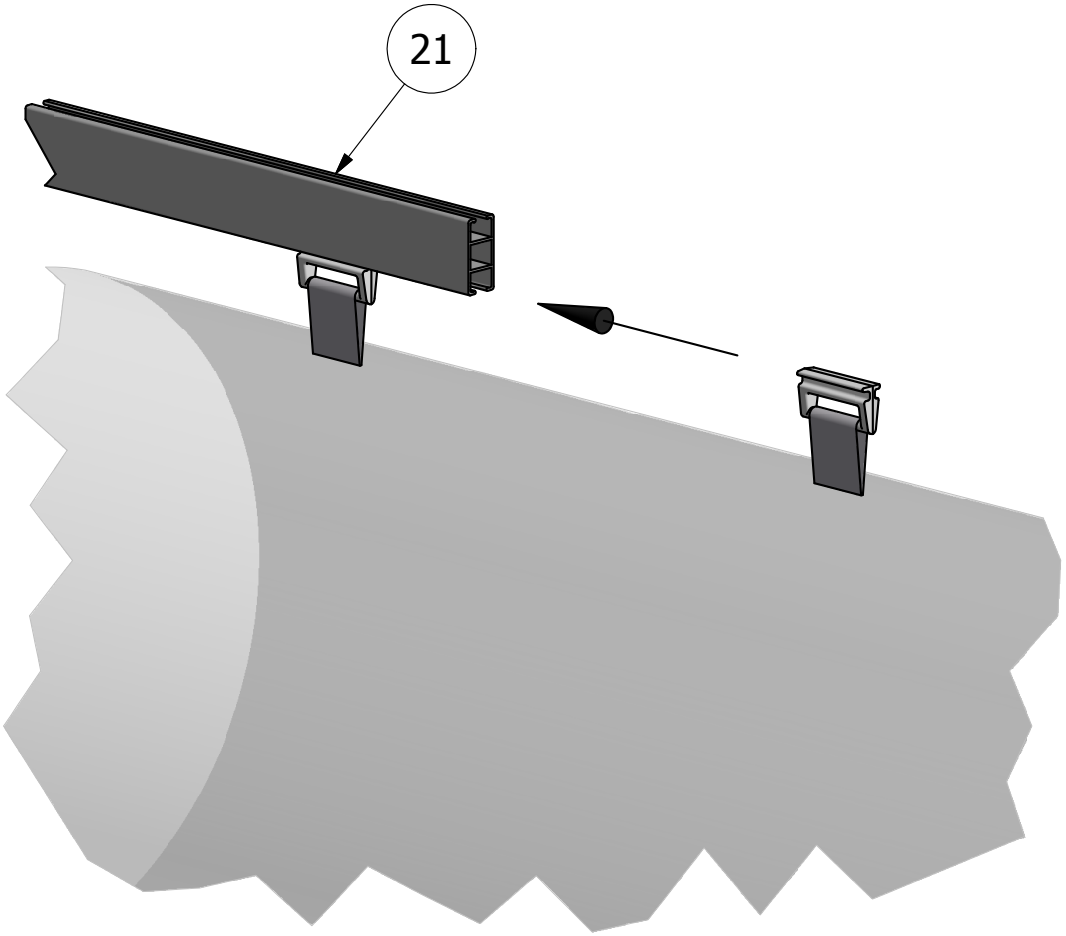

08.08 Type 8 and type 8 all in one,
FabricAir® Installation Drawing
2003-0808-000 (2014-FEB)

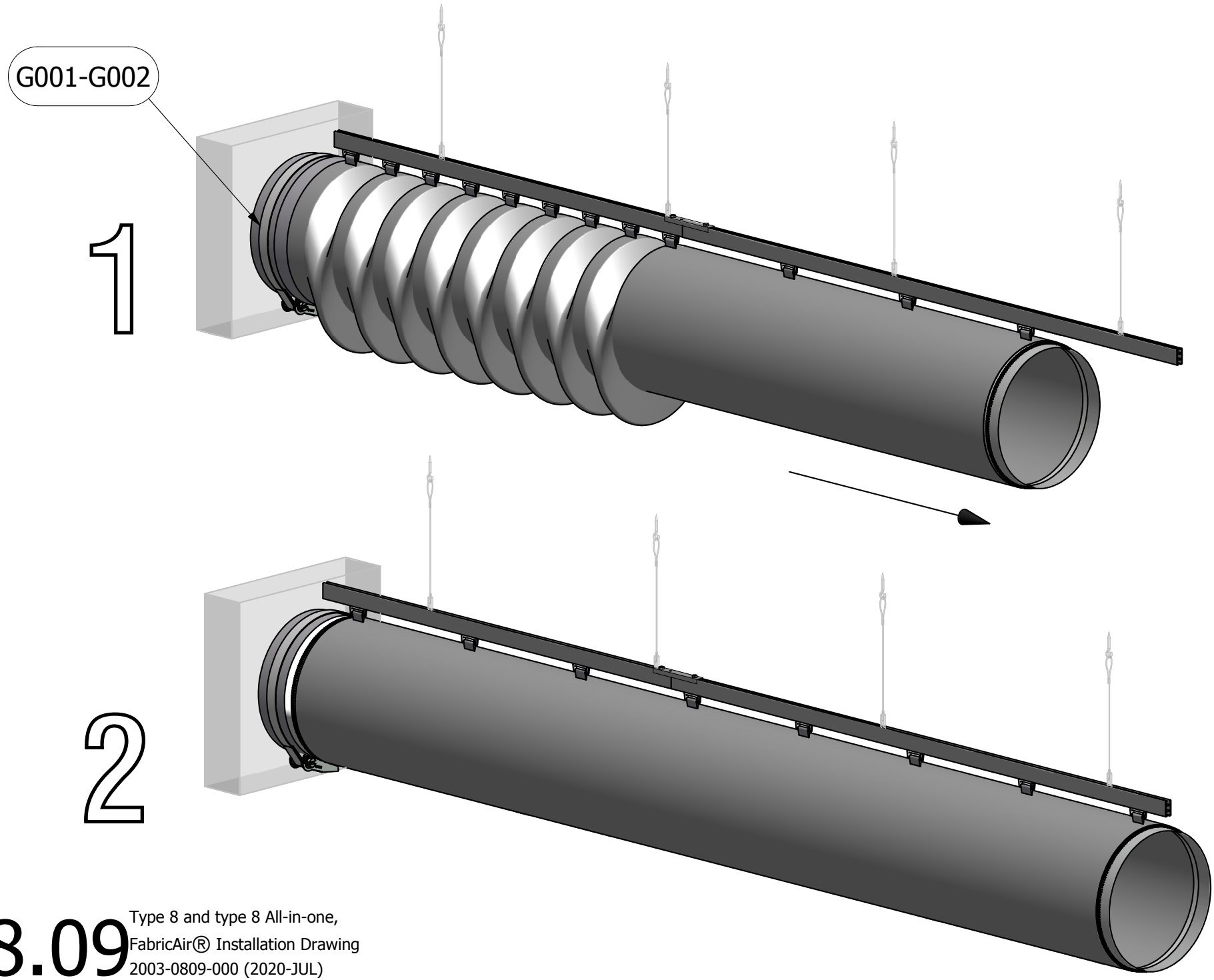

08.09 Type 8 and type 8 All-in-one,
FabricAir® Installation Drawing
2003-0809-000 (2020-JUL)

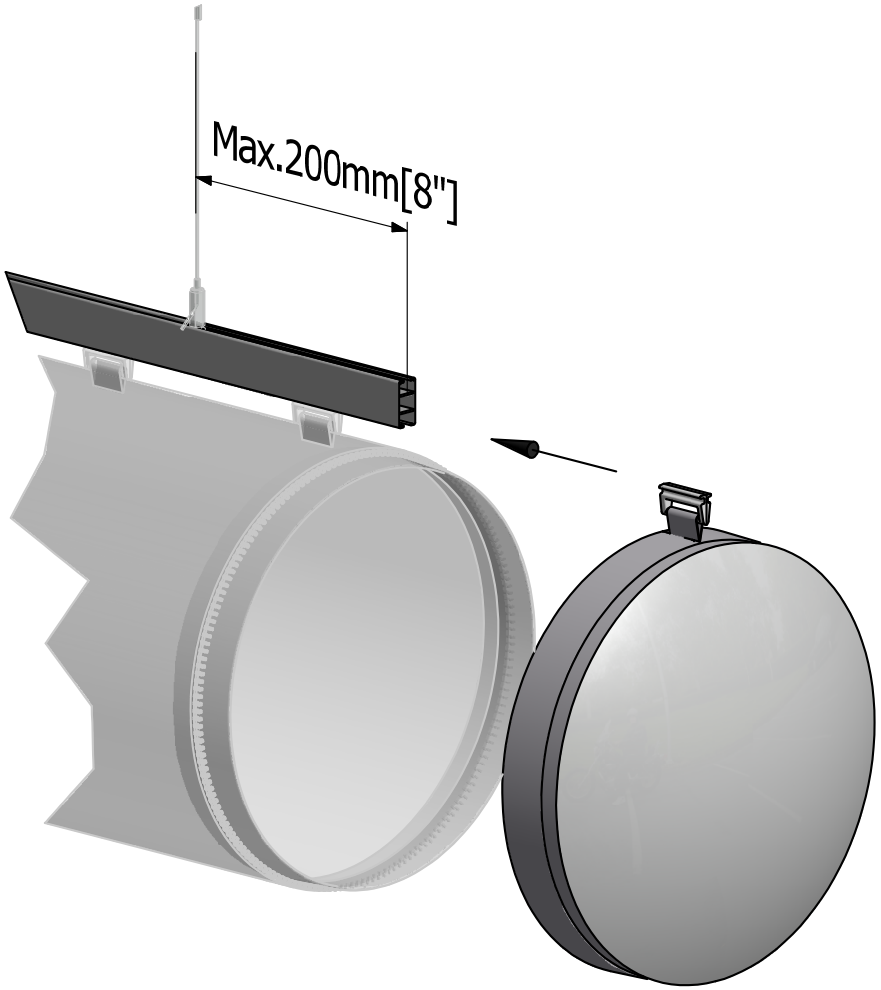

1

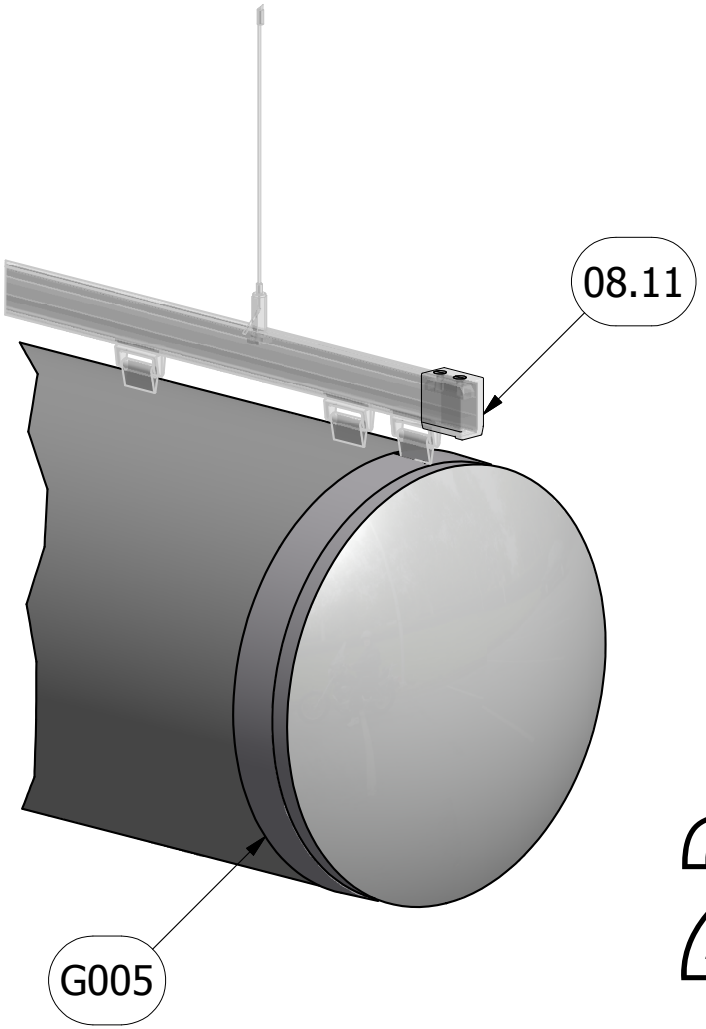

2

08.10

Type 8 and type 8 All-in-one,
FabricAir® Installation Drawing
2003-0810-000 (2020-JUL)

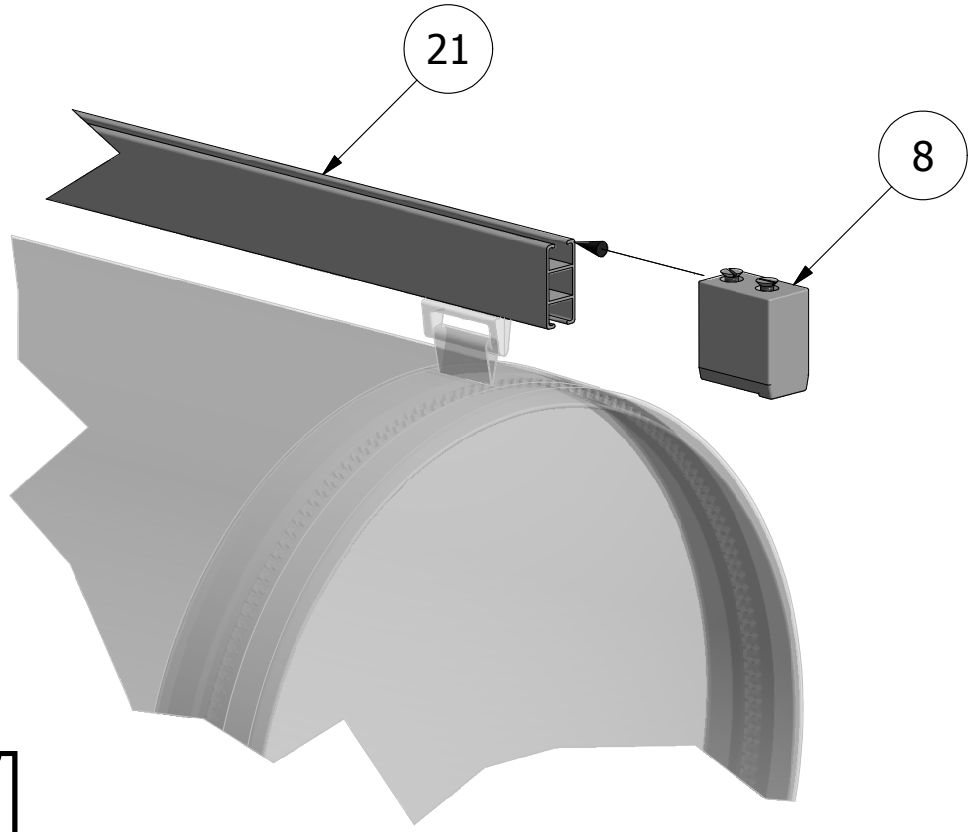

1

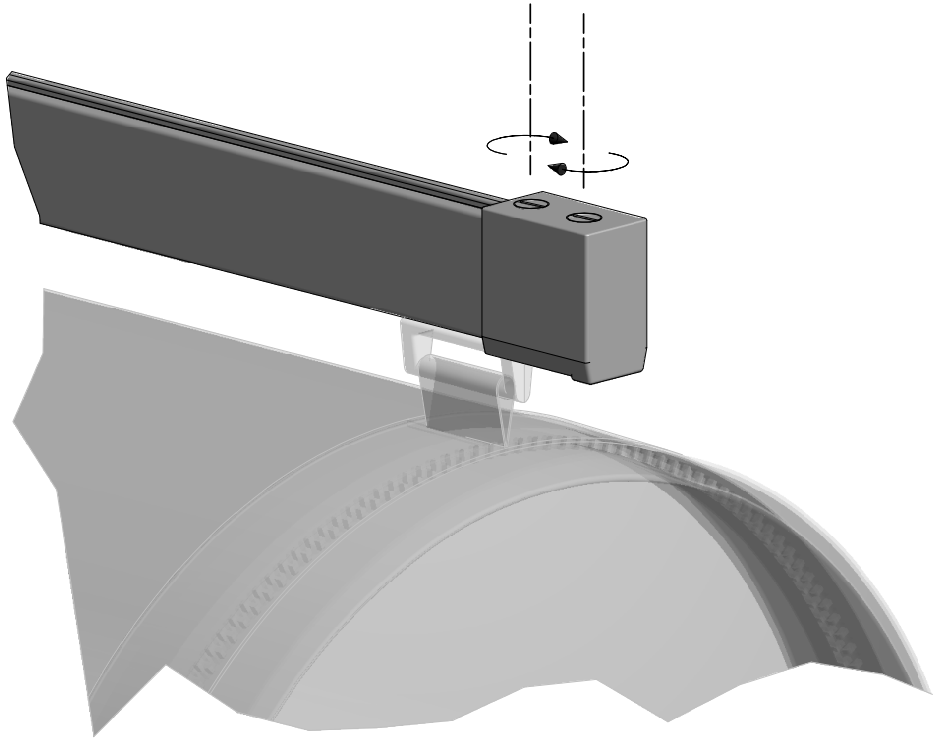

2

08.11 Type 8 and type 8 all in one,
FabricAir® Installation Drawing
2003-0811-000 (2014-FEB)

0 < d < 915mm[36"]

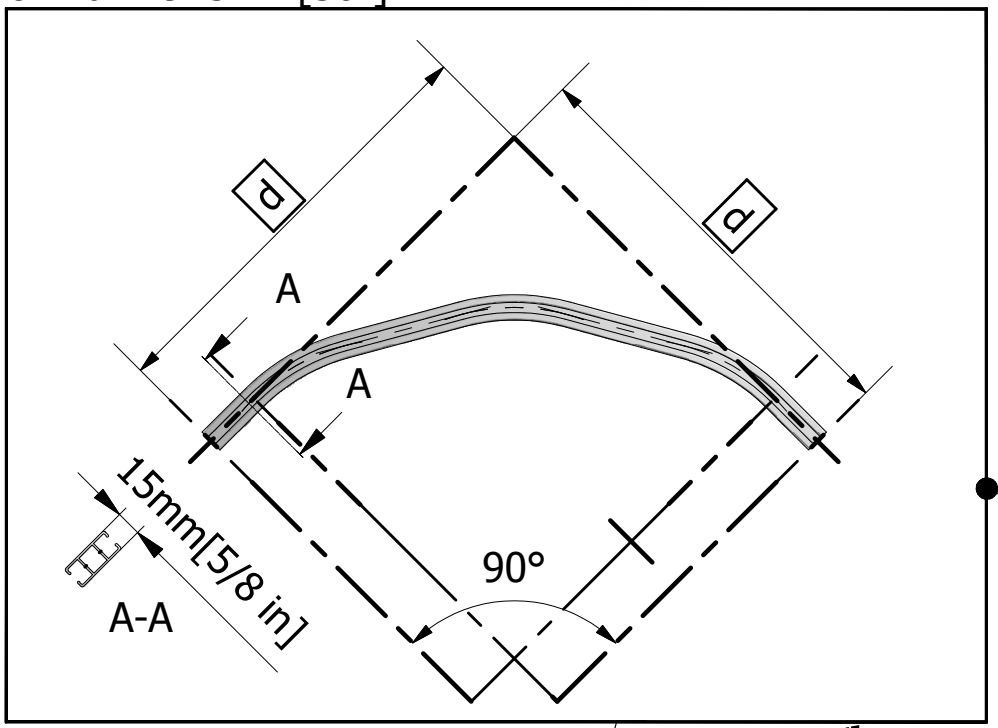

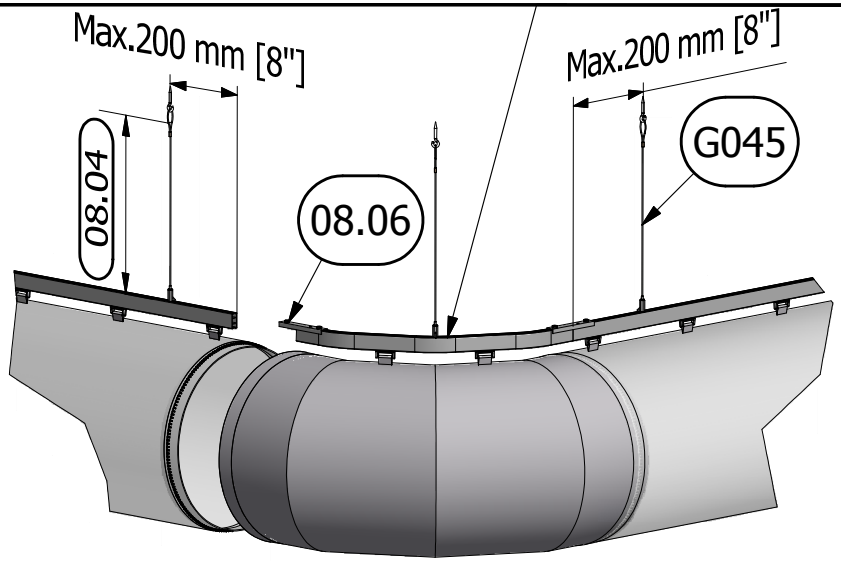

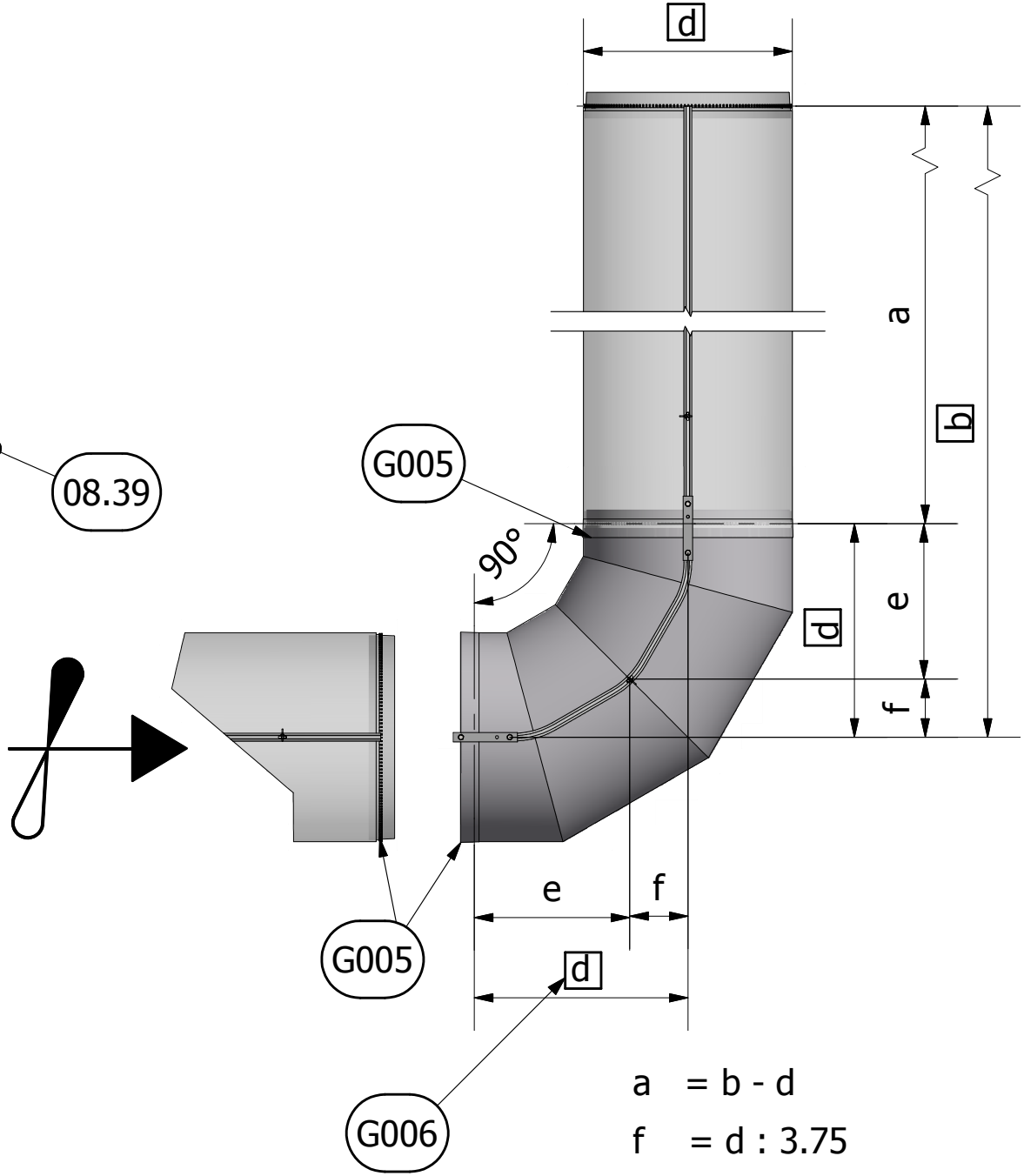

a = b - d

f = d : 3.75

e = d - f

08.12

Type 8 and type 8 all in one,
FabricAir® Installation Drawing
2003-0812-000(2020-JUL)

916mm [36"] < d < 2035mm [80"]

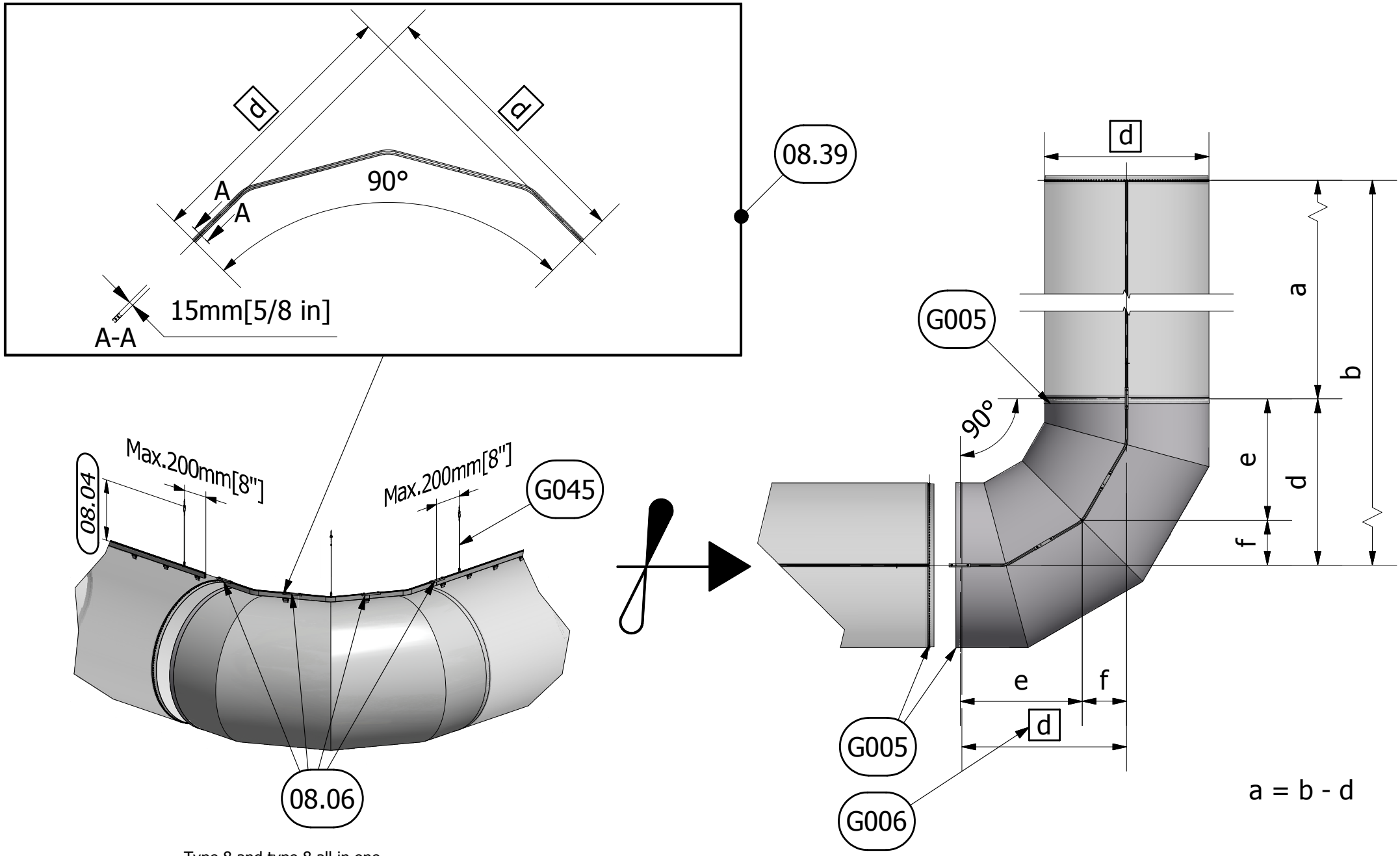

08.13

Type 8 and type 8 all in one,
FabricAir® Installation Drawing
2003-0813-000 (2020-JUL)

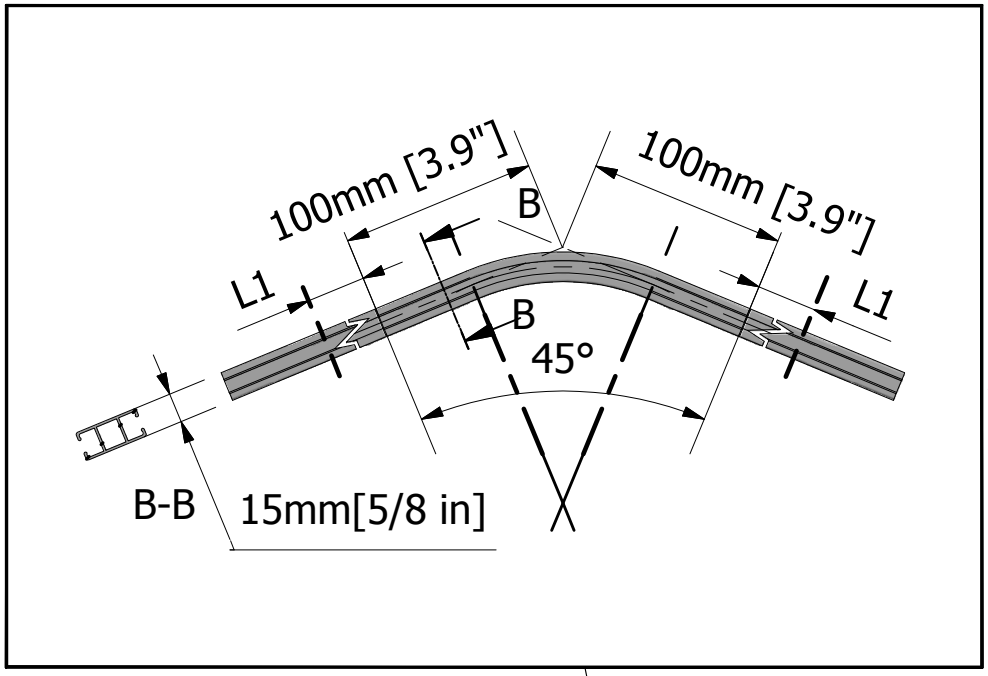

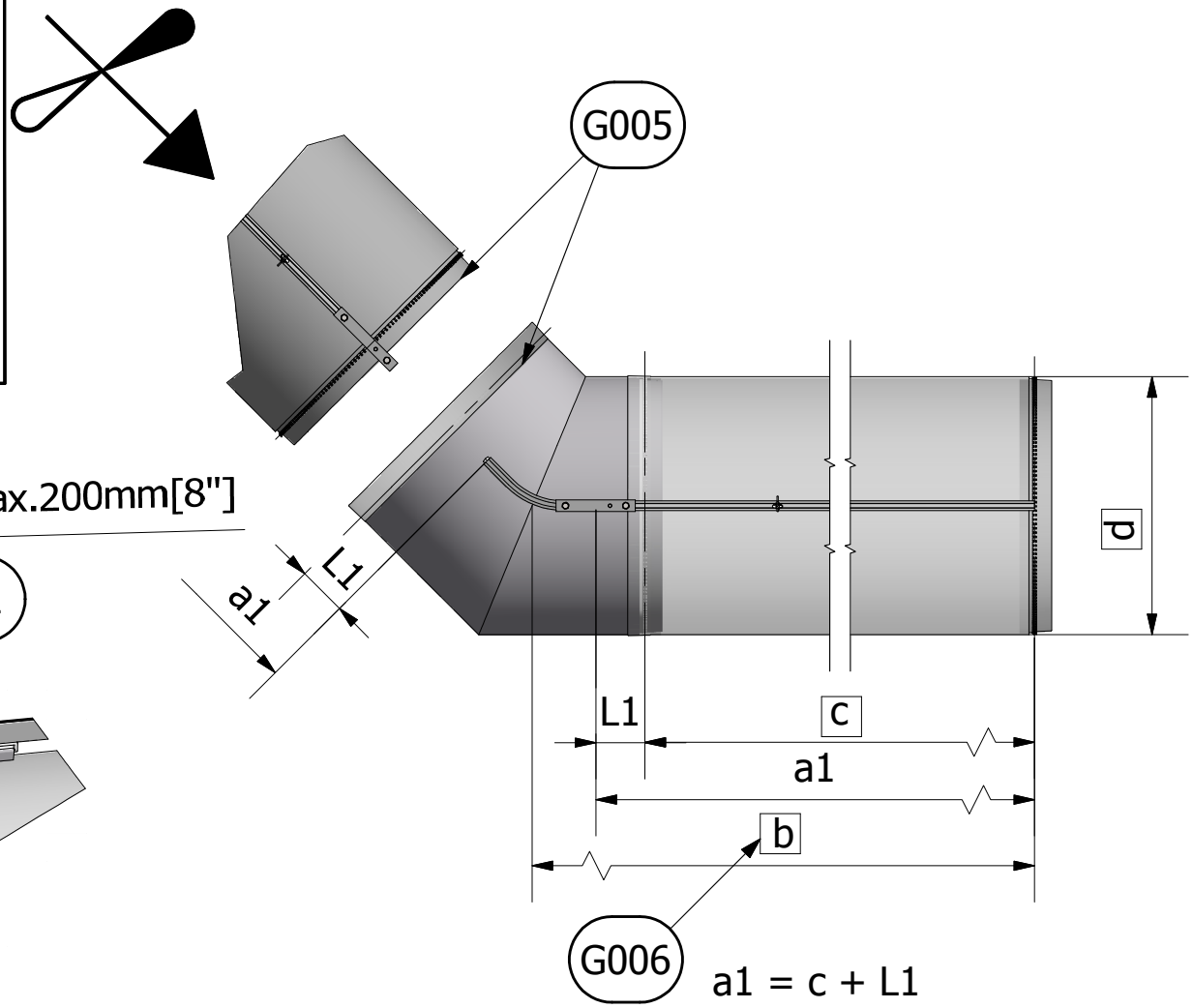

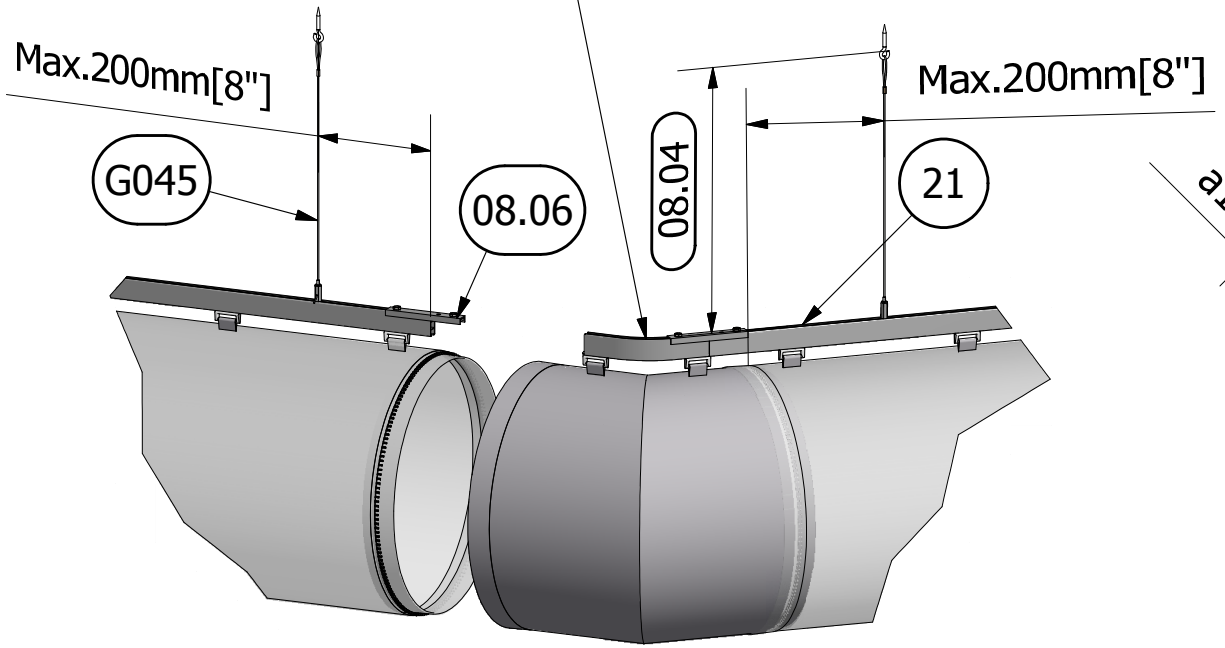

a1 = c + L1

a1 = b - 100mm[3.9"]

L1 ⟶ 08.40

08.14

Type 8 and type 8 all in one,
FabricAir® Installation Drawing
2003-0814-000 (2020-JUL)

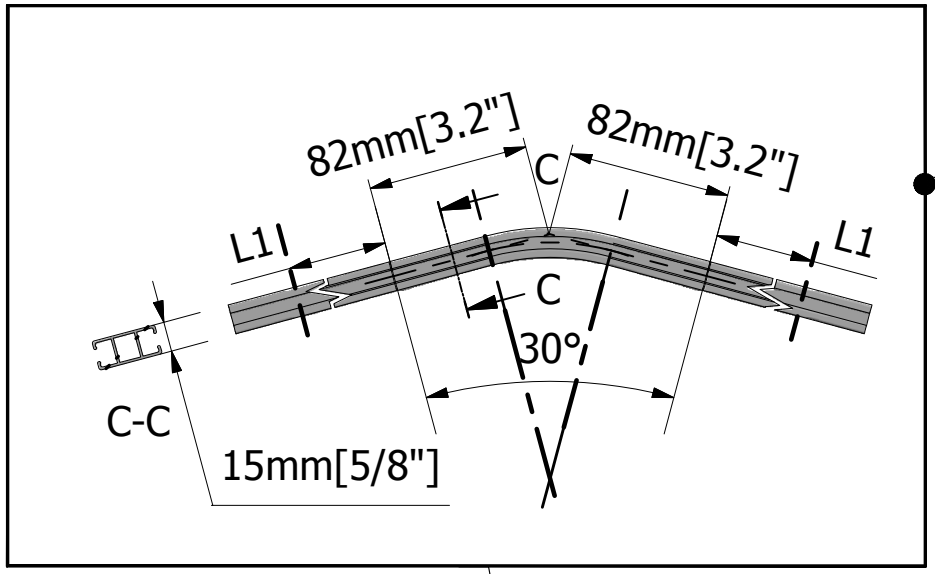

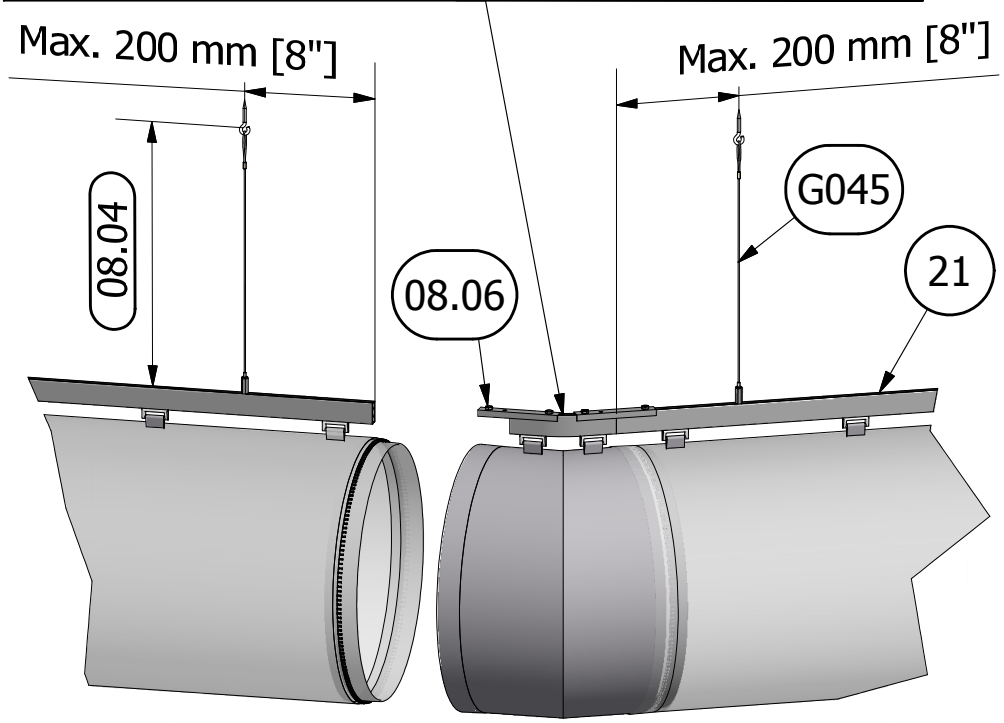

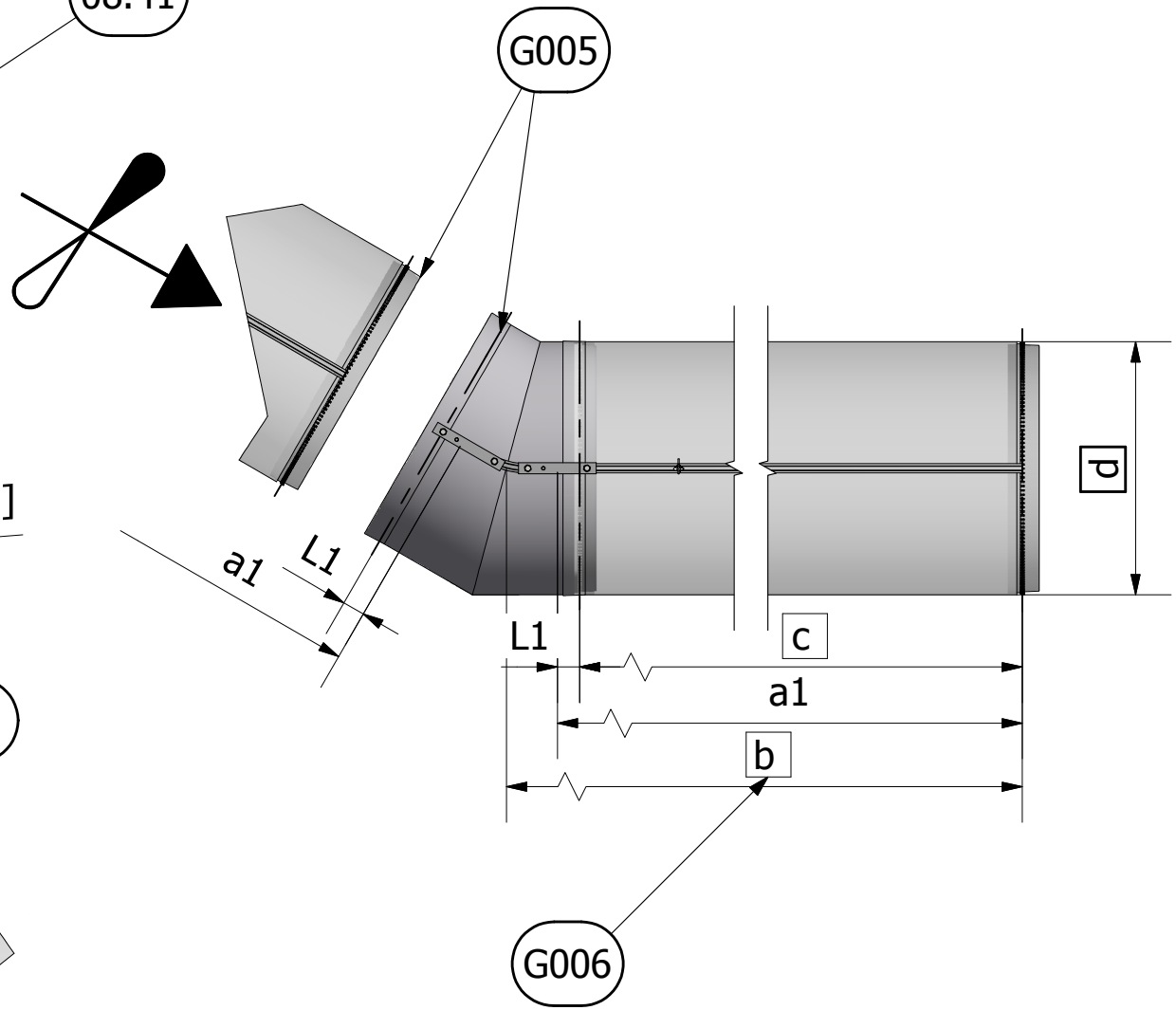

a1 = c + L1

a1 = b - 82mm[3.2"]

L1 ⟶ 08.41

08.15

Type 8 and type 8 all in one
FabricAir® Installation Drawing
2003-0815-000 (2020-JUL)

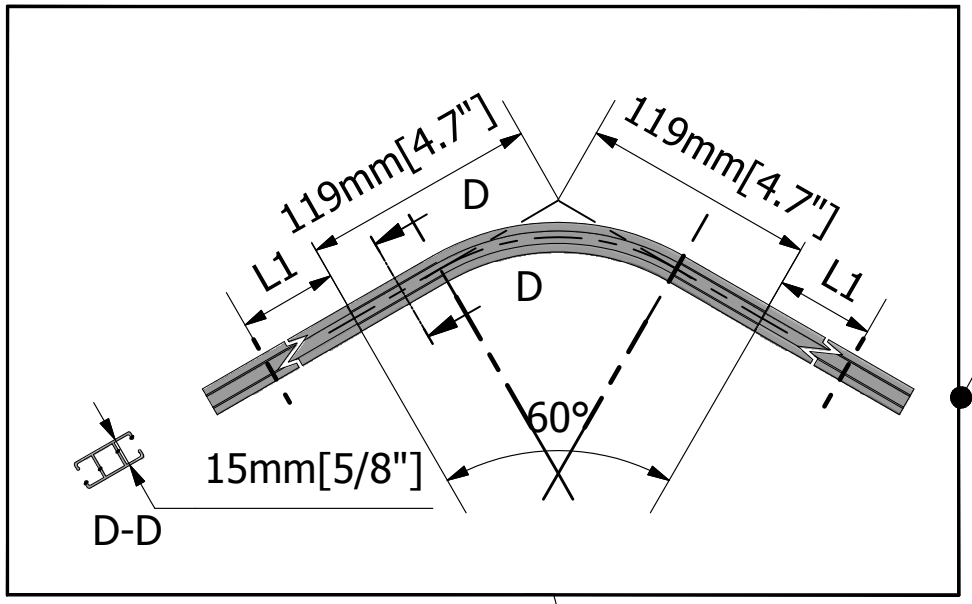

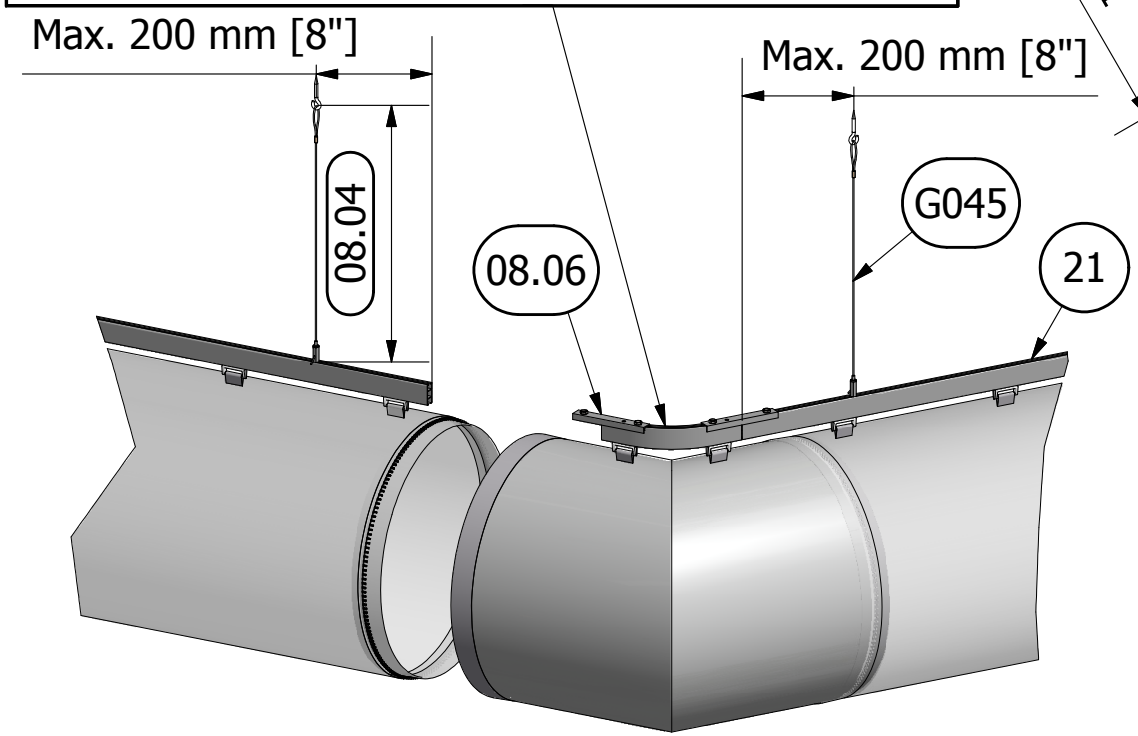

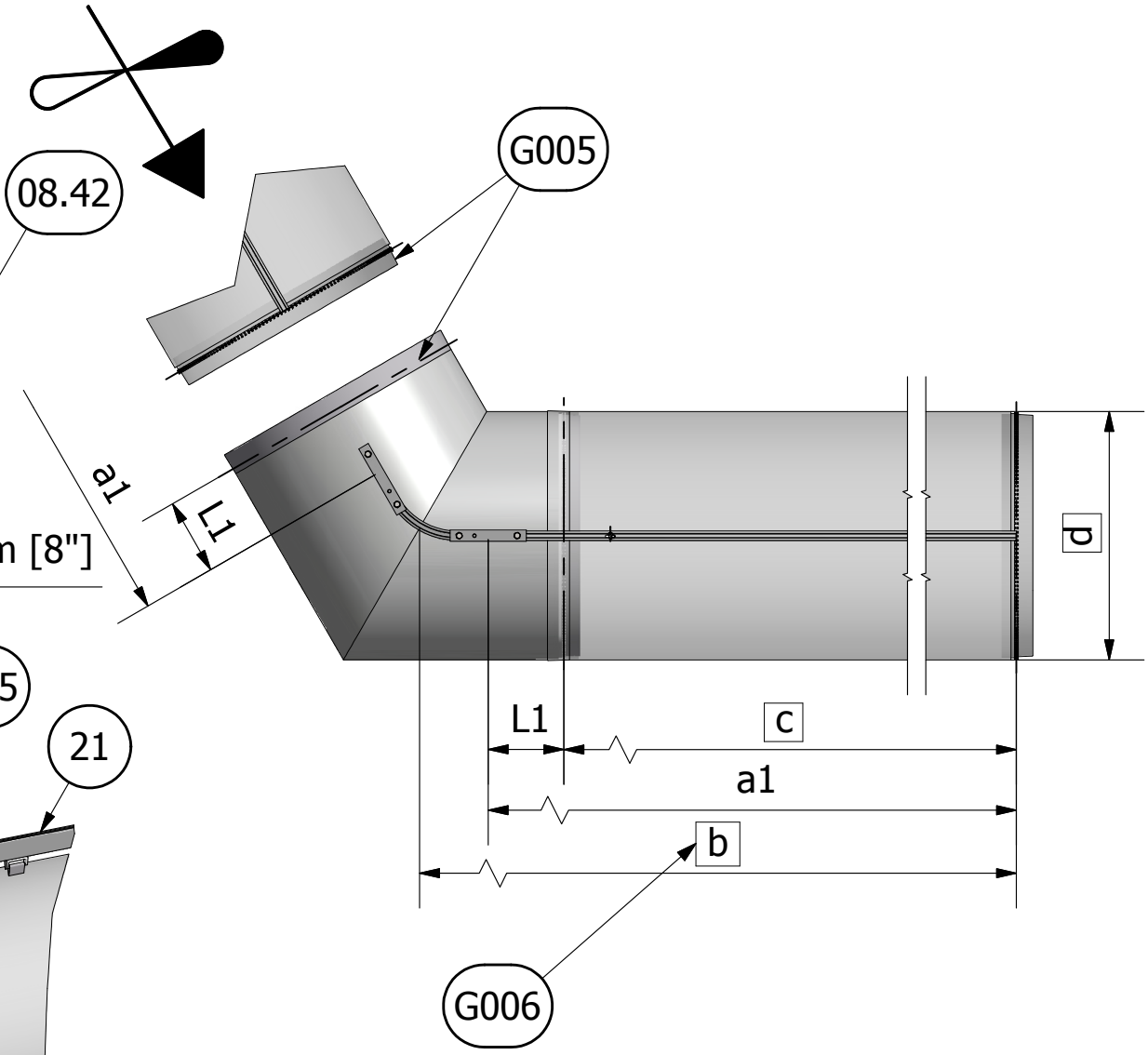

a1 = c + L1

a1 = b - 119mm[4.7"]

L1 ⟶ 08.42

08.16

Type 8 and type 8 all in one,
FabricAir® Installation Drawing
2003-0816-000 (2020-JUL)

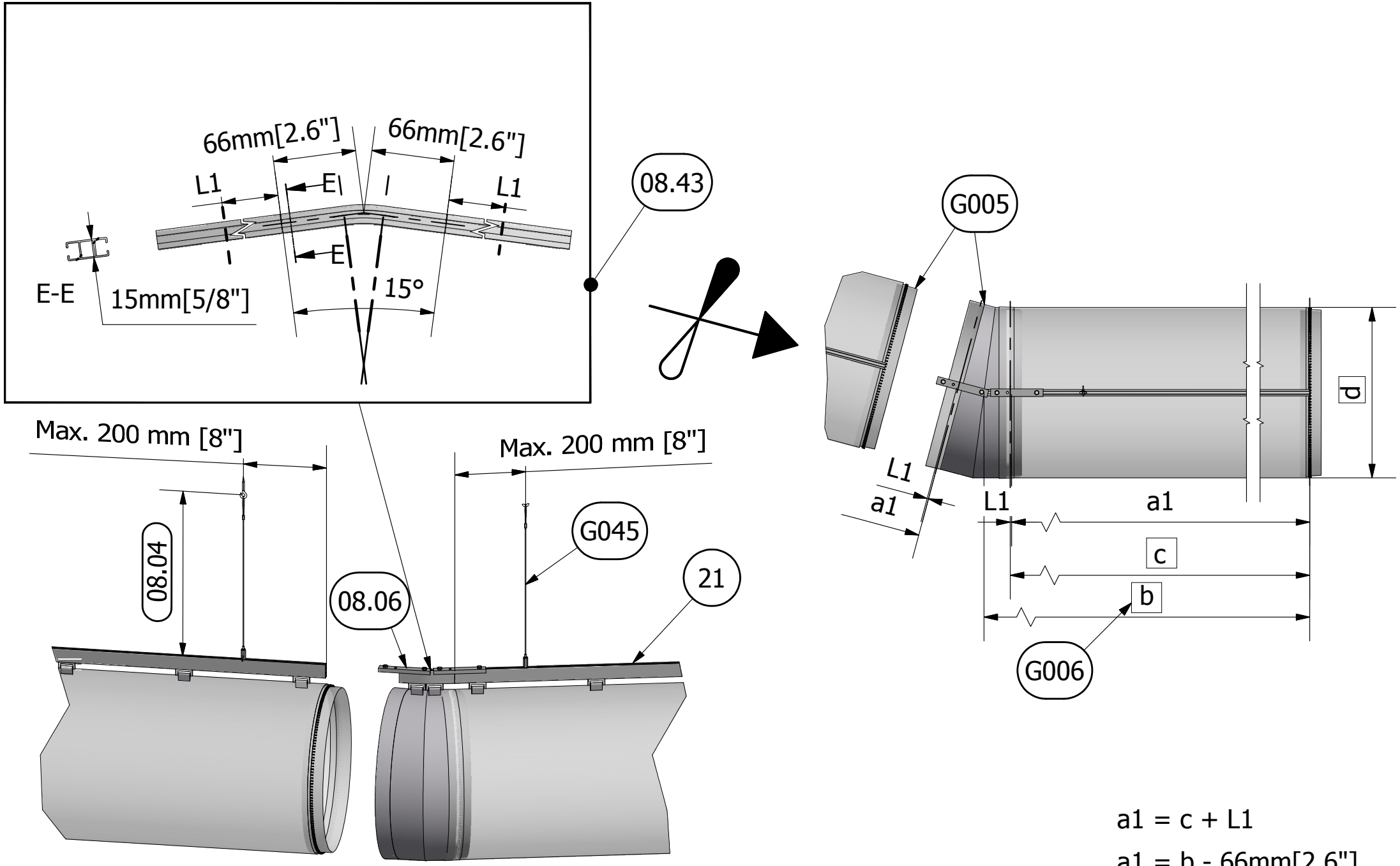

a1 = c + L1

a1 = b - 66mm[2.6"]

L1 ⟶ 08.43

08.17

Type 8 and type 8 all in one,
FabricAir® Installation Drawing
2003-0817-000 (2020-JUL)

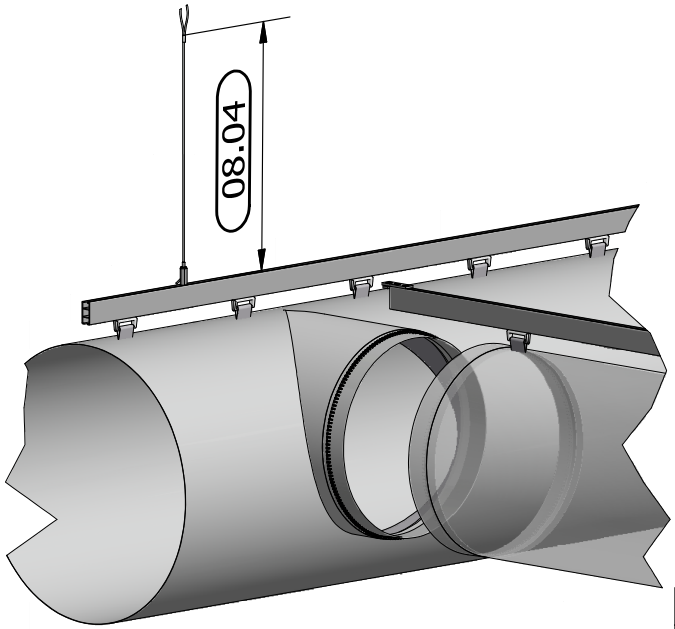

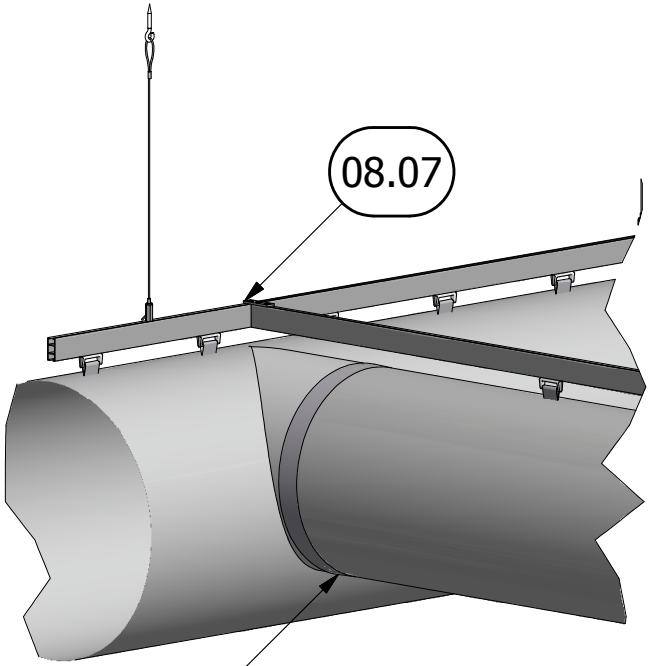

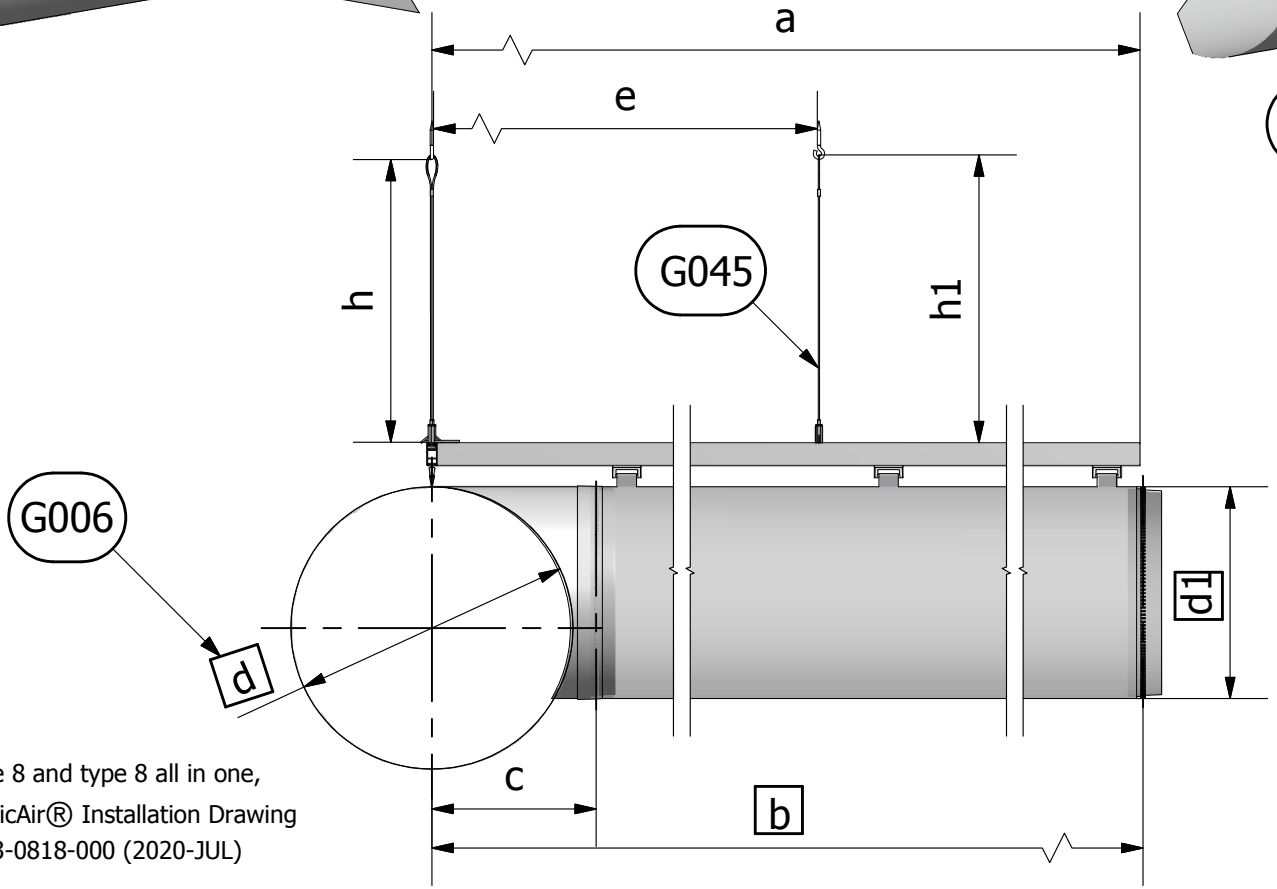

a = b - 8mm[0.3"]

c = ½ d + 35mm[1.37"]

e = c + Max.1500mm[59"]

h = h1

08.18

Type 8 and type 8 all in one,
FabricAir® Installation Drawing
2003-0818-000 (2020-JUL)

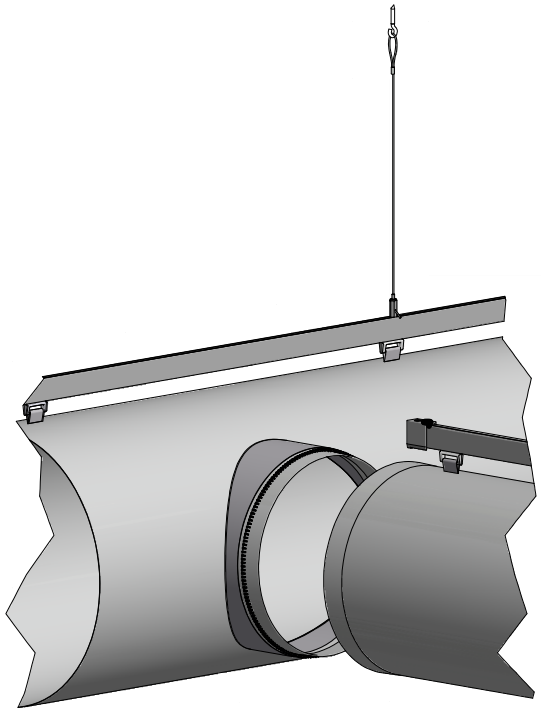

1

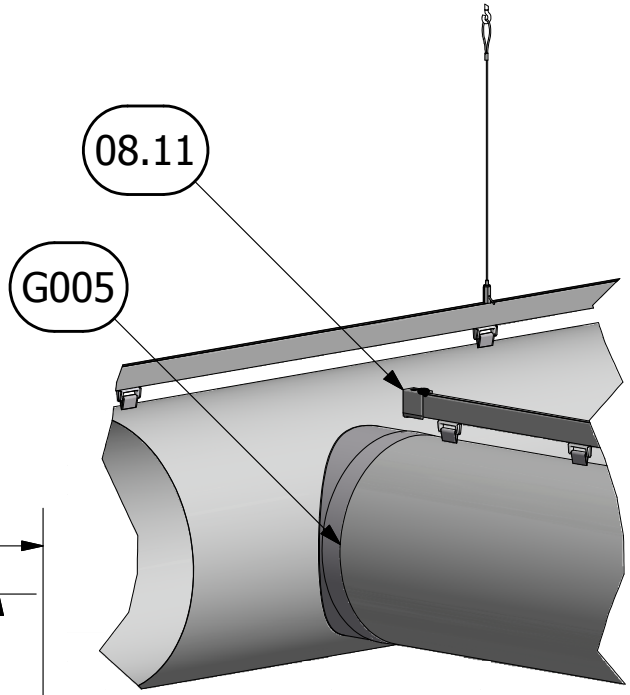

2

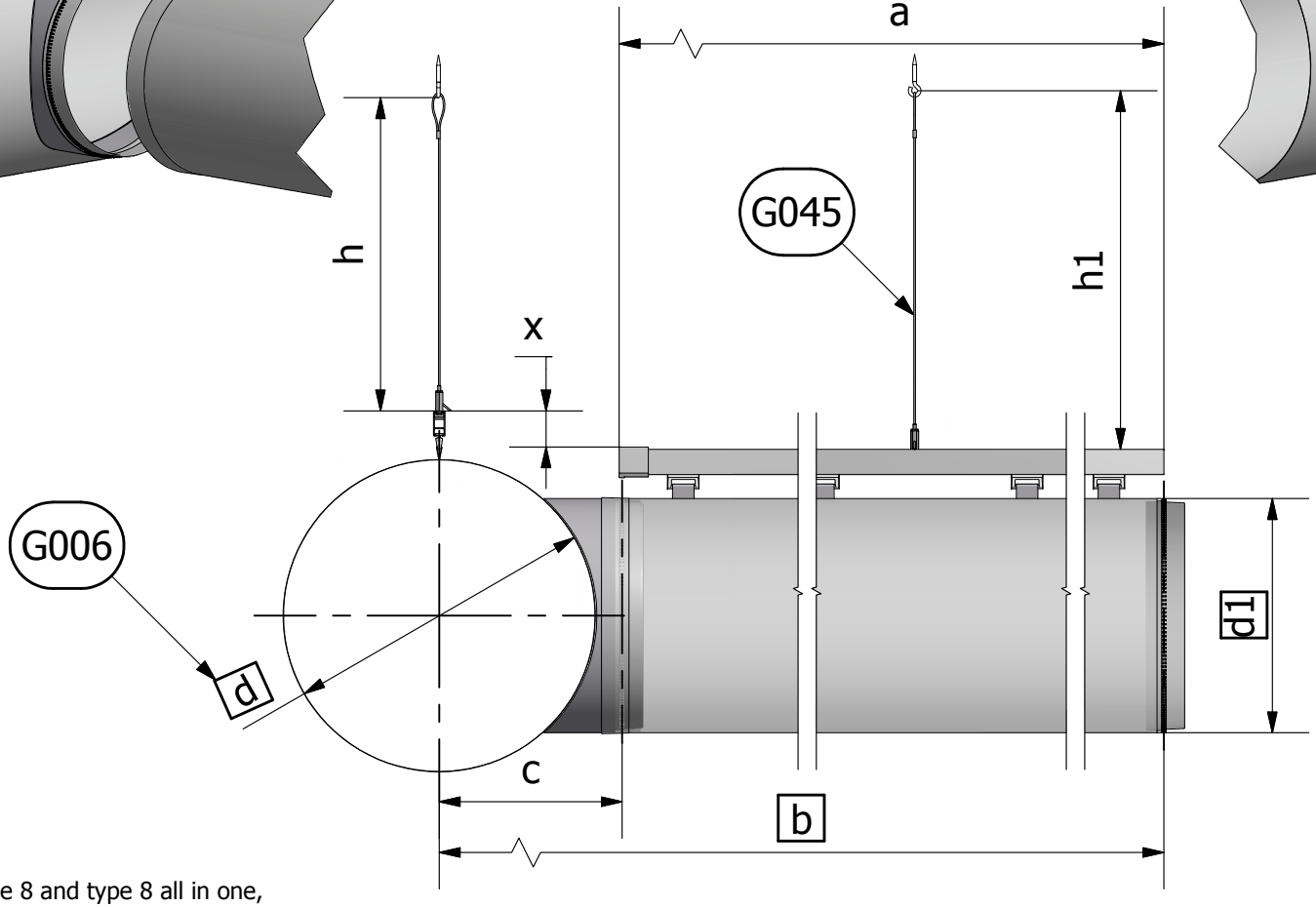

a = b - c

c = ½ d +35mm[1.37"]

e = c + Max.1500mm[59"]

x = ½ (d - d1)

h1 = h + x

08.19

Type 8 and type 8 all in one,
FabricAir® Installation Drawing
2003-0819-000 (2020-JUL)

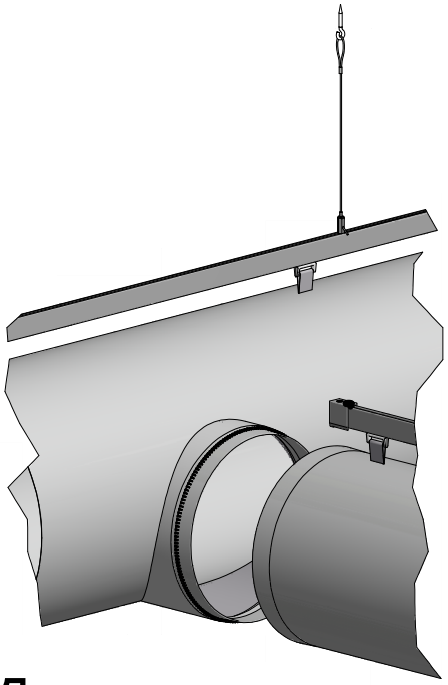

1

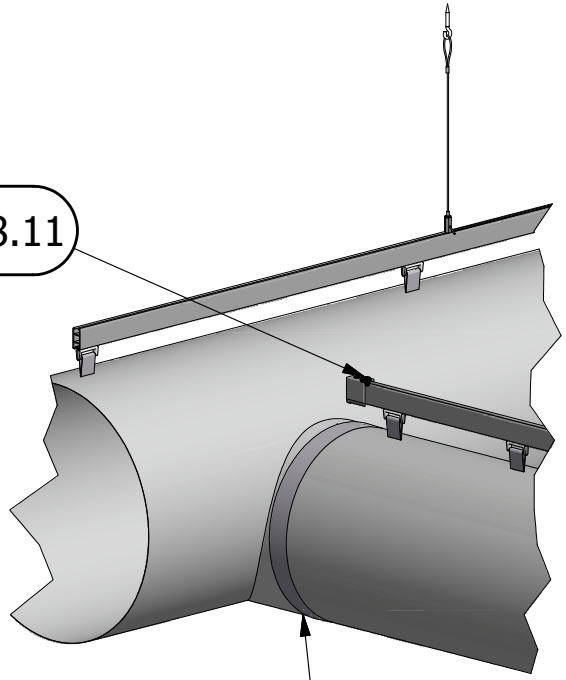

2

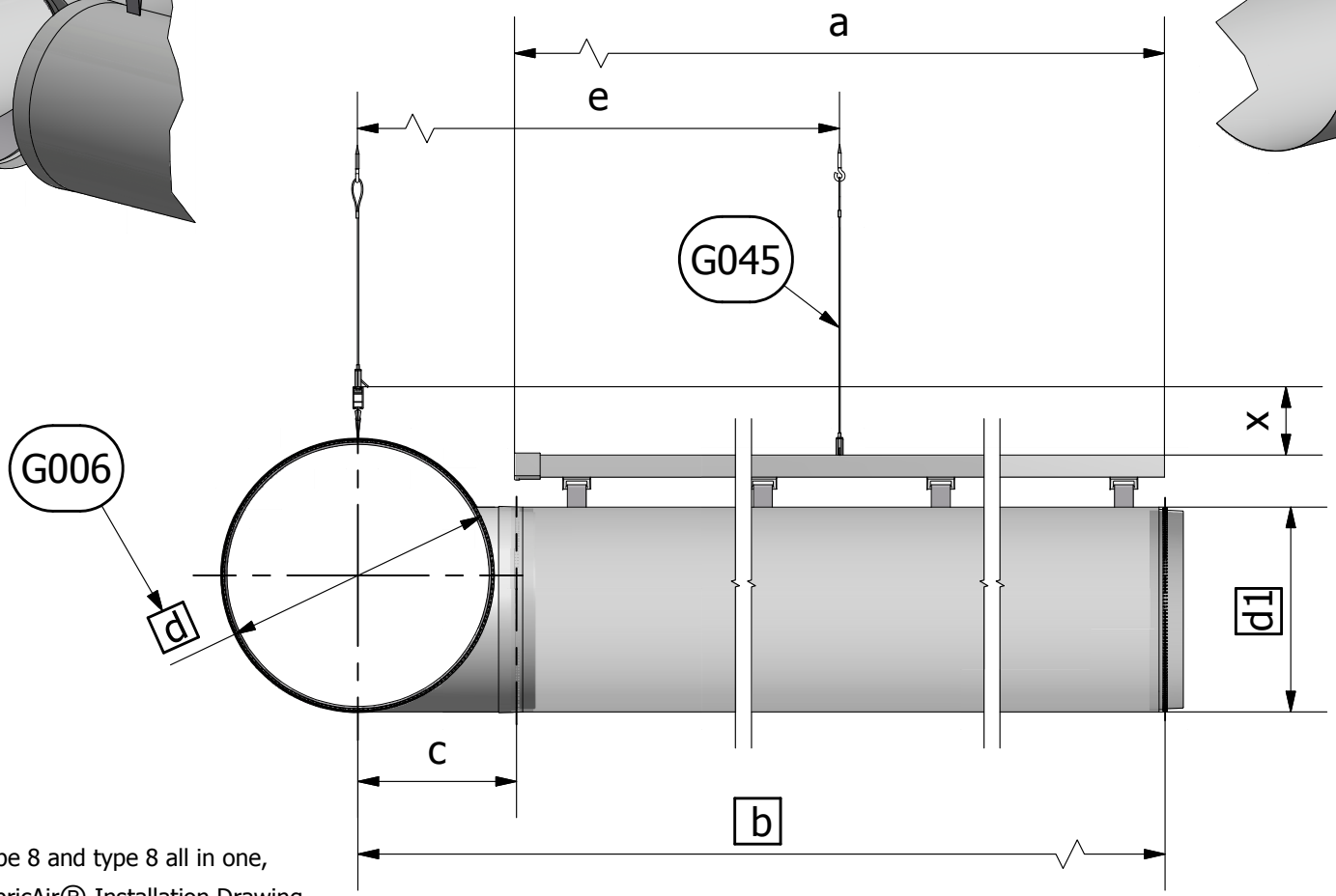

a = b - c

c = ½ d + 35mm[1.38"]

e = c + Max. 1500mm[4'-11"]

x = d - d1

h1 = h + x

08.20

Type 8 and type 8 all in one,
FabricAir® Installation Drawing
2003-0820-000 (2020-JUL)

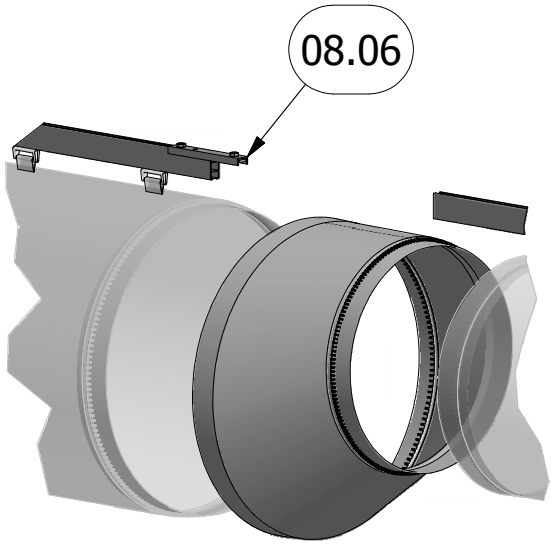

1

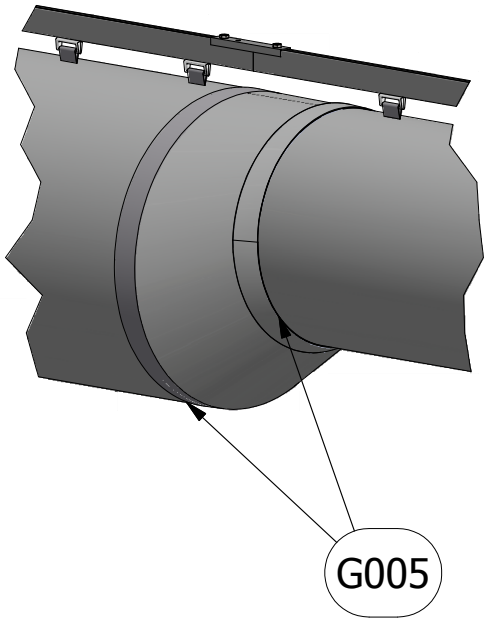

2

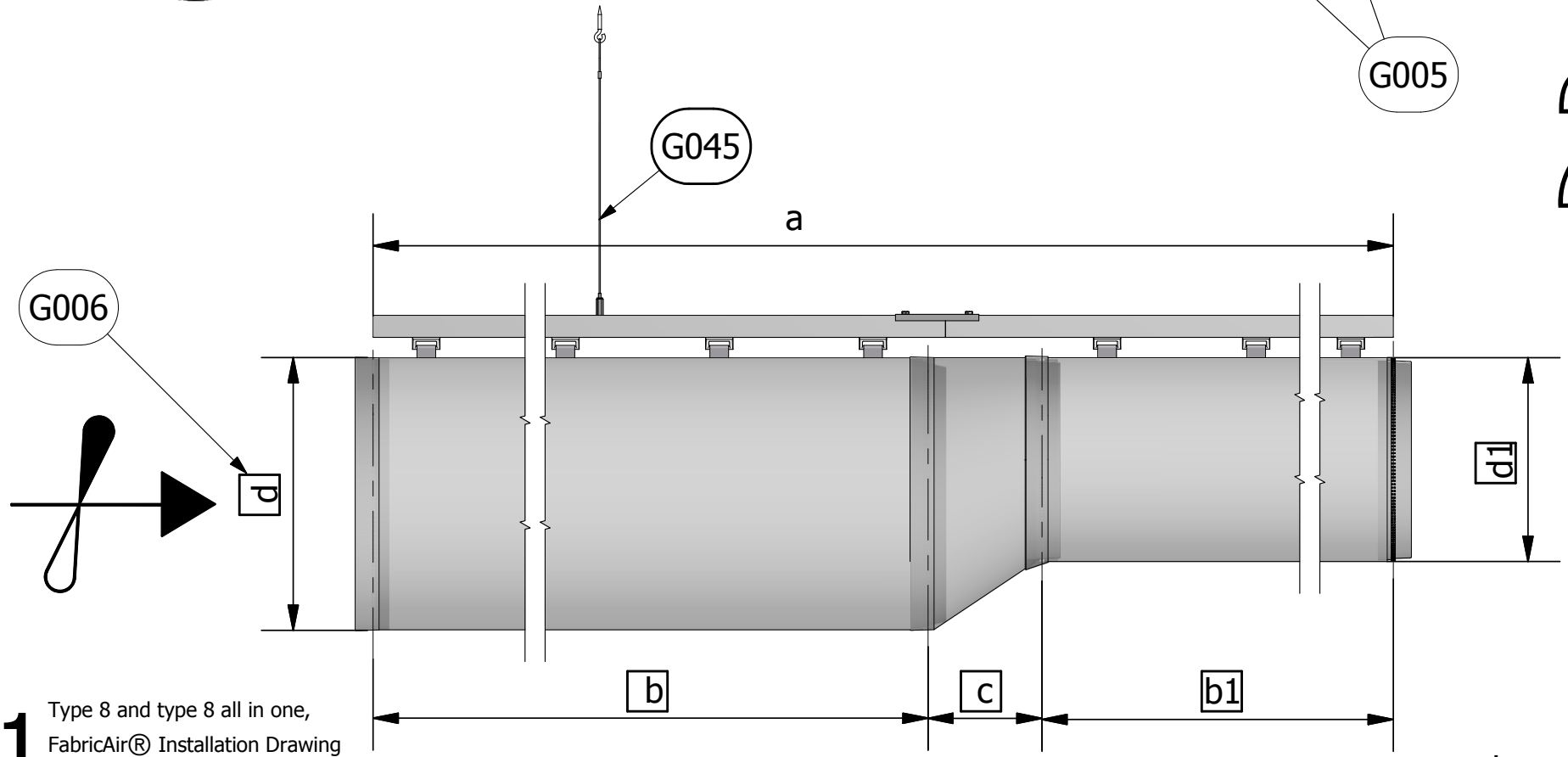

08.21

Type 8 and type 8 all in one,
FabricAir® Installation Drawing
2003-0821-000 (2020-JUL)

a = b + c + b1

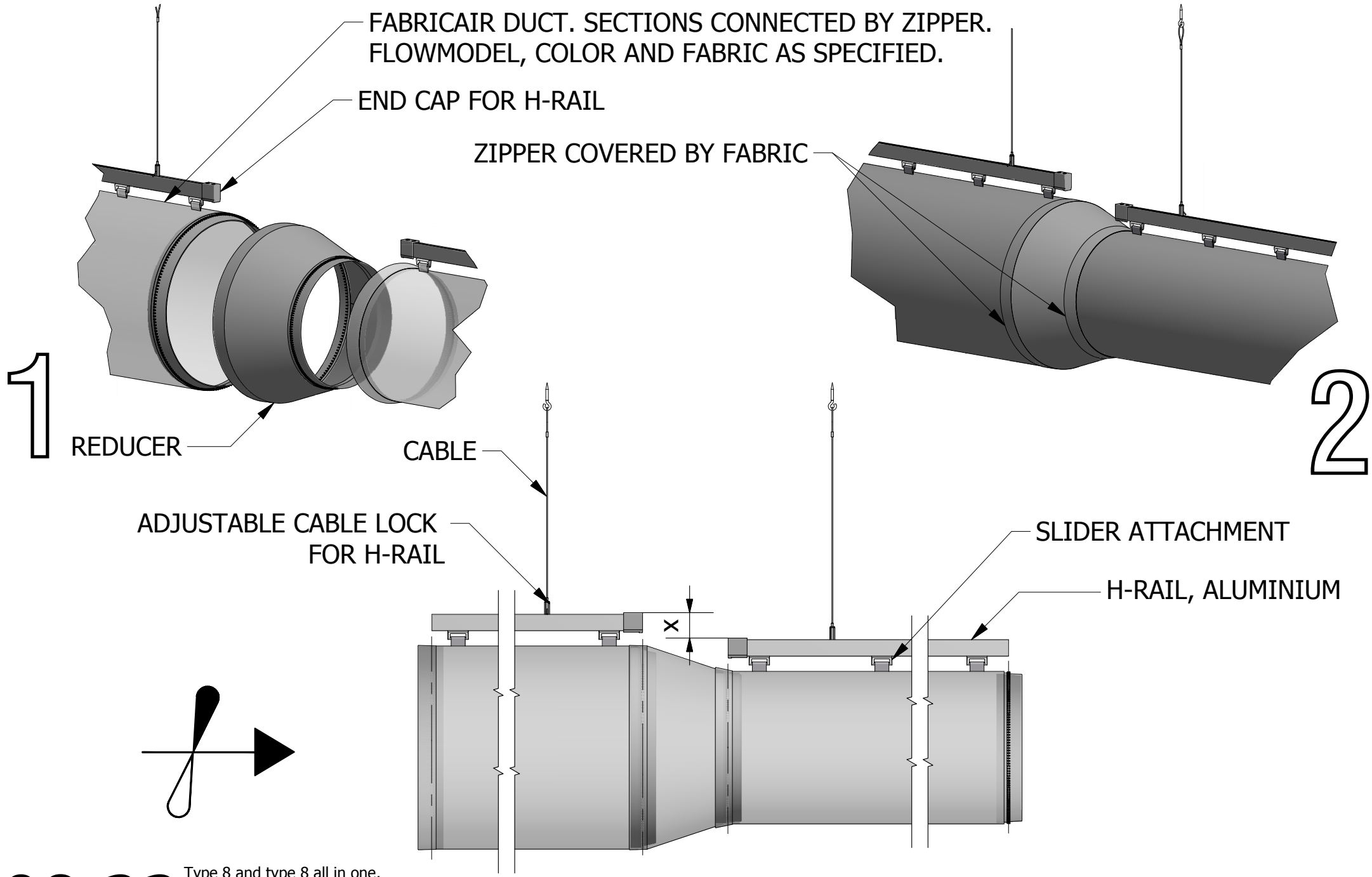

08.22

Type 8 and type 8 all in one,
FabricAir® Installation Drawing
2003-0822-000 (2020-JUL)

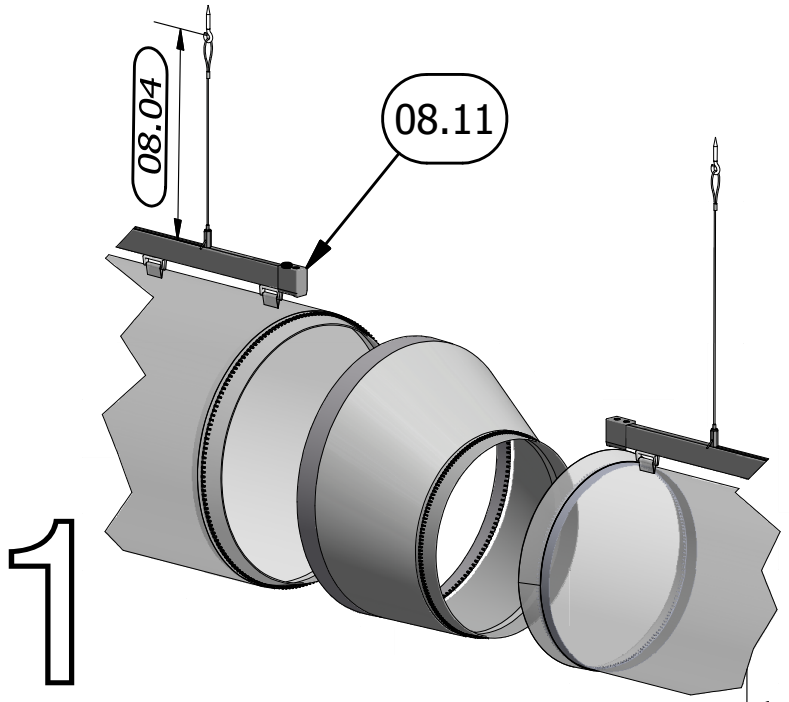

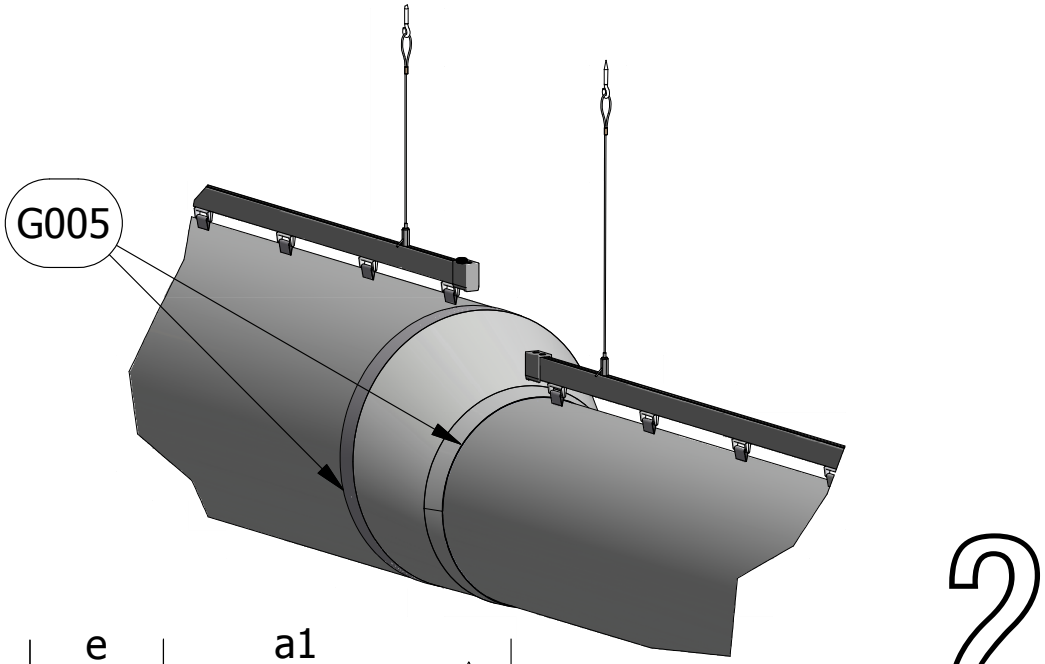

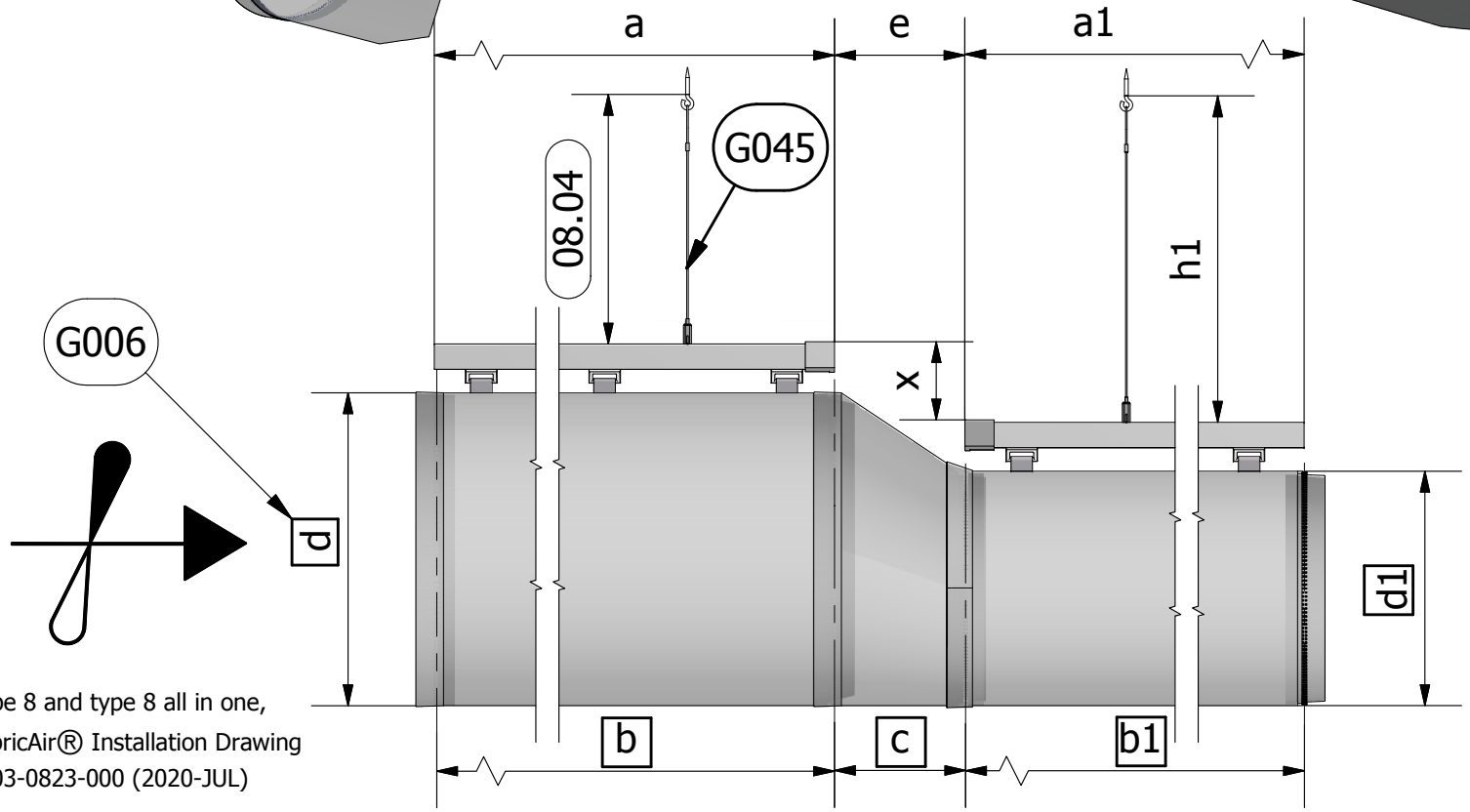

x = d - d1
a = b
a1 = b1
e = c
h1 = h + x

08.23

Type 8 and type 8 all in one,
FabricAir® Installation Drawing
2003-0823-000 (2020-JUL)

90°

d-Duct Diam. [inch]	d-Duct Diam. [mm]	L1	g	L2
	100	27	54	-
	160	43	86	-
	200	54	107	-
8	205	55	110	-
	250	67	134	-
10	255	68	137	-
	300	80	161	-
12	305	82	163	-
	315	84	169	-
14	360	96	193	-
	400	107	214	-
16	410	110	220	-
	450	121	241	-
18	460	123	247	-
	500	134	268	-
20	510	137	273	-
22	560	150	300	-
	600	161	322	-
24	610	163	327	-
	630	169	388	-
26	660	177	354	-
	710	190	380	-
28	715	192	383	-
30	765	205	410	-
	800	214	429	-
32	815	218	437	-
34	865	232	464	-
	900	241	482	-
36	915	245	490	-
38	965	-	-	259
	1000	-	-	268
40	1020	-	-	273
42	1070	-	-	287
	1100	-	-	295
44	1120	-	-	300
46	1170	-	-	314
	1200	-	-	322
48	1220	-	-	327
	1250	-	-	335
50	1270	-	-	340
	1300	-	-	348
52	1320	-	-	354
	1400	-	-	375
56	1425	-	-	382
58	1480	-	-	397
	1500	-	-	402
60	1525	-	-	409
62	1580	-	-	423
	1600	-	-	429
64	1630	-	-	437
66	1680	-	-	450
	1700	-	-	456
68	1730	-	-	464
70	1780	-	-	477
	1800	-	-	482
72	1830	-	-	490
	1900	-	-	509
76	1930	-	-	517
	2000	-	-	536
80	2035	-	-	545

0 < d <915mm[36"]

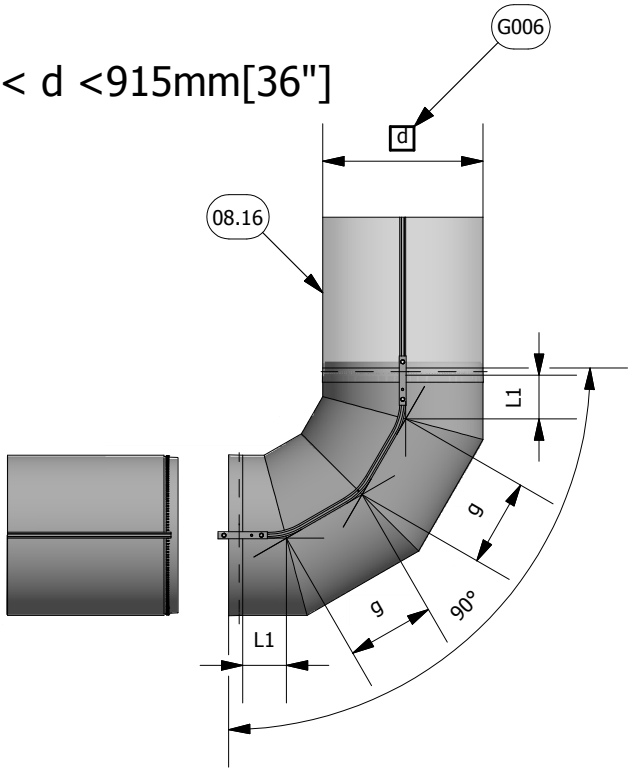

916mm[36"] < d <2035mm[80"]

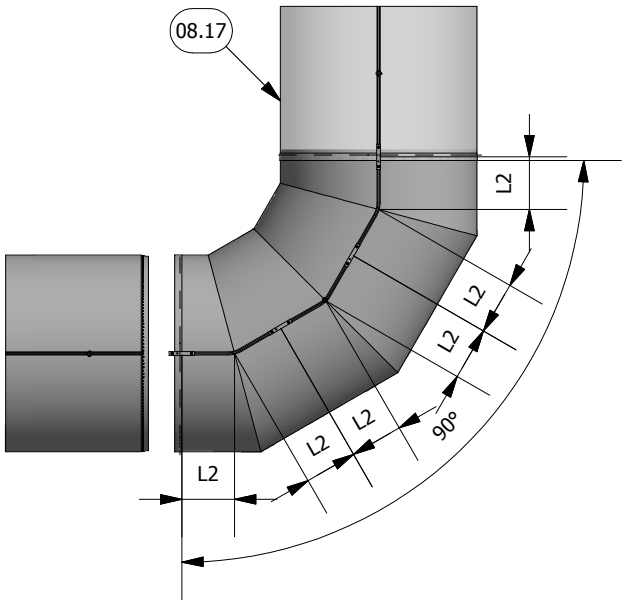

45°

d-Duct Diam.[inch]	d-Duct Diam.[mm]	L1
	100	-50
	160	-25
	200	-8
8	205	-6
	250	13
10	255	15
	300	33
12	305	35
	315	39
14	360	58
	400	75
16	410	79
	450	95
18	460	100
	500	116
20	510	120
22	560	141
	600	158
24	610	162
	630	170
26	660	182
	710	203
28	715	205
30	765	226
	800	240
32	815	247
34	865	267
	900	282
36	915	288
38	965	309
	1000	323
40	1020	331
42	1070	352
	1100	365
44	1120	373
46	1170	394
	1200	406
48	1220	414
	1250	427
50	1270	435
	1300	447
52	1320	456
	1400	489
56	1425	499
58	1480	522
	1500	530
60	1525	541
62	1580	563
	1600	572
64	1630	584
66	1680	605
	1700	613
68	1730	626
70	1780	646
	1800	655
72	1830	667
	1900	696
76	1930	708
	2000	737
80	2035	752

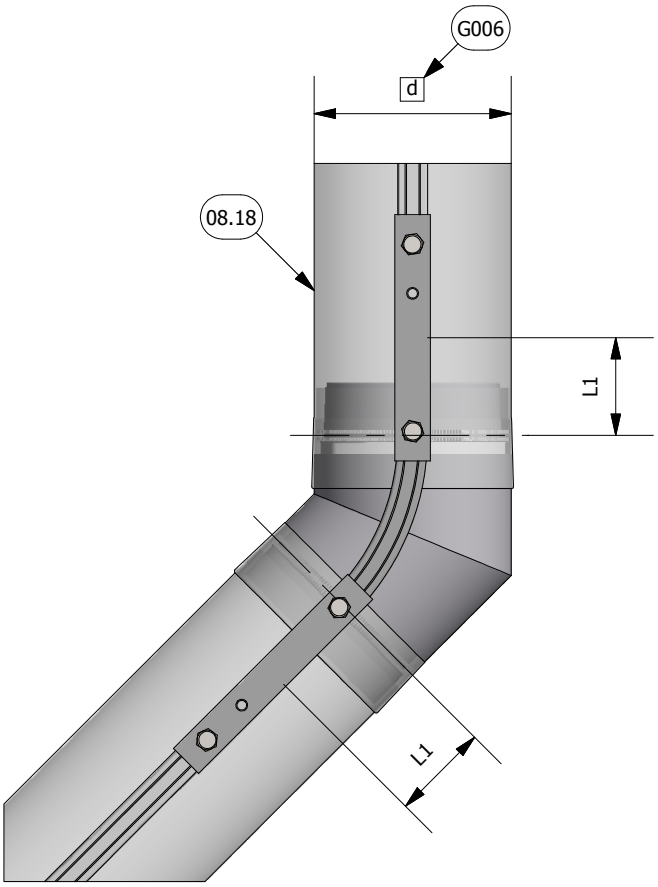

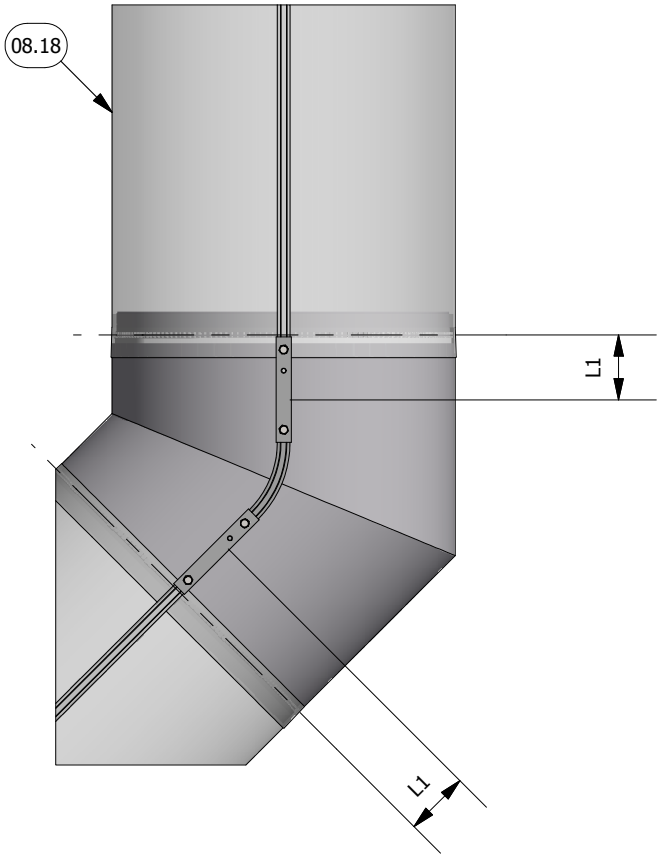

08.40

Type 8 and type 8 all in one
FabricAir® Installation Drawing
2003-0840-000 (2019-SEP)

30°

d-Duct Diam.[inch]	d-Duct Diam.[mm]	L1
	100	-46
	160	-30
	200	-19
8	205	-18
	250	-6
10	255	-5
	300	7
12	305	9
	315	11
14	360	23
	400	34
16	410	37
	450	48
18	460	50
	500	61
20	510	64
22	560	77
	600	88
24	610	90
	630	96
26	660	104
	710	117
28	715	119
30	765	132
	800	141
32	815	145
34	865	159
	900	168
36	915	172
38	965	186
	1000	195
40	1020	200
42	1070	214
	1100	222
44	1120	227
46	1170	241
	1200	249
48	1220	254
	1250	262
50	1270	267
	1300	275
52	1320	281
	1400	302
56	1425	309
58	1480	324
	1500	329
60	1525	336
62	1580	350
	1600	356
64	1630	364
66	1680	377
	1700	383
68	1730	391
70	1780	404
	1800	409
72	1830	417
	1900	436
76	1930	444
	2000	463
80	2035	472

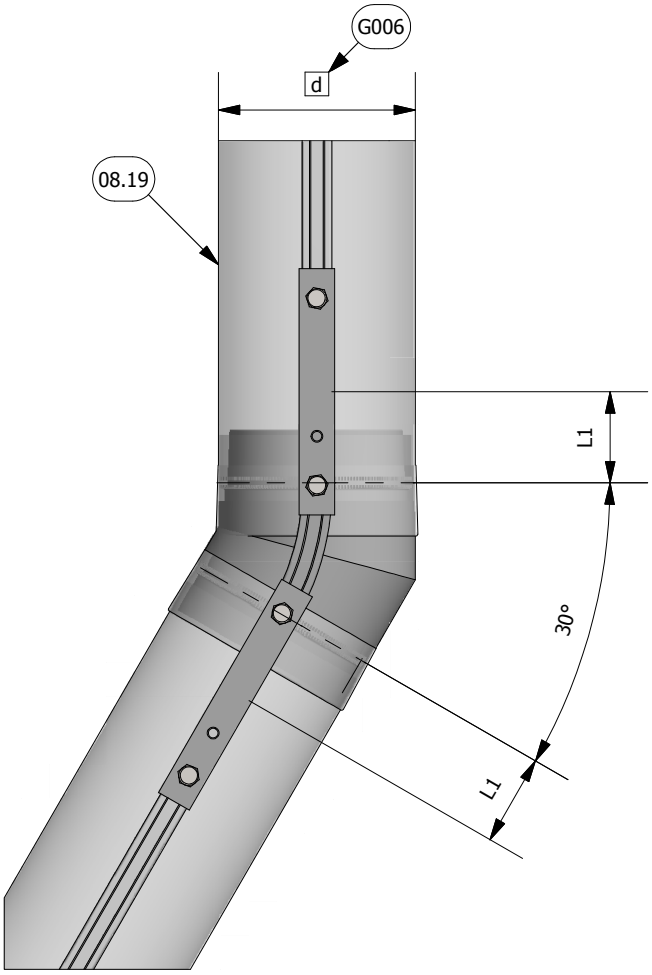

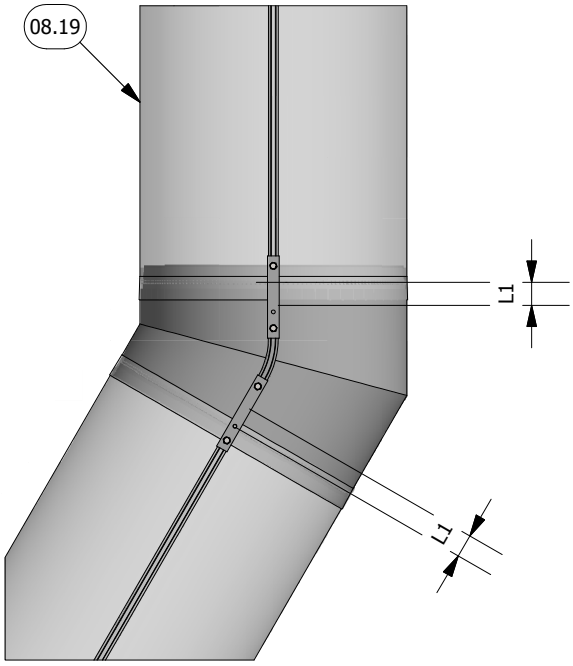

60°

d-Duct Diam.[inch]	d-Duct Diam.[mm]	L1
	100	-52
	160	-18
	200	5
8	205	8
	250	34
10	255	37
	300	63
12	305	66
	315	72
14	360	98
	400	121
16	410	127
	450	150
18	460	156
	500	179
20	510	184
22	560	213
	600	236
24	610	242
	630	254
26	660	271
	710	300
28	715	303
30	765	332
	800	352
32	815	361
34	865	389
	900	410
36	915	418
38	965	447
	1000	467
40	1020	479
42	1070	508
	1100	525
44	1120	537
46	1170	565
	1200	583
48	1220	594
	1250	612
50	1270	623
	1300	641
52	1320	652
	1400	698
56	1425	713
58	1480	744
	1500	756
60	1525	770
62	1580	802
	1600	813
64	1630	831
66	1680	859
	1700	871
68	1730	888
70	1780	917
	1800	929
72	1830	946
	1900	986
76	1930	1004
	2000	1044
80	2035	1064

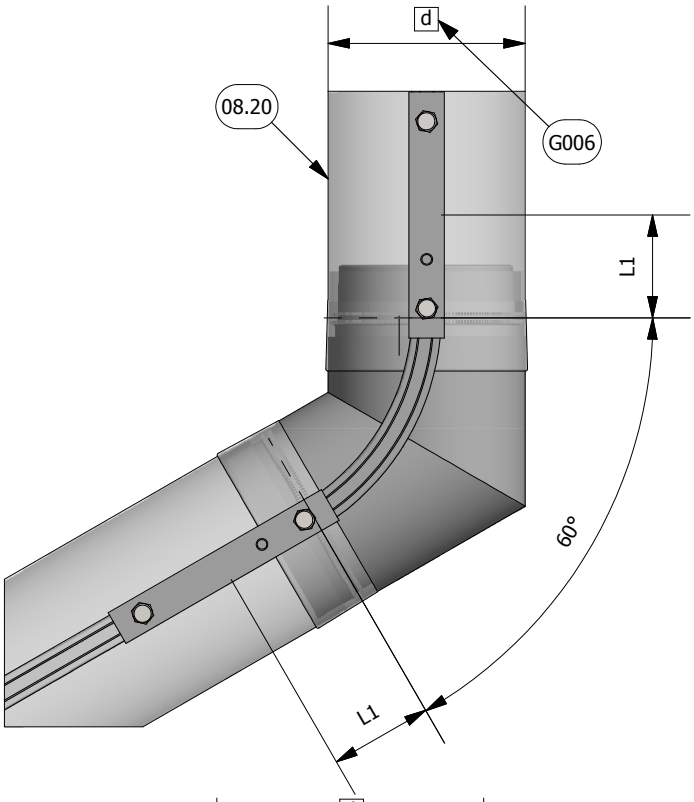

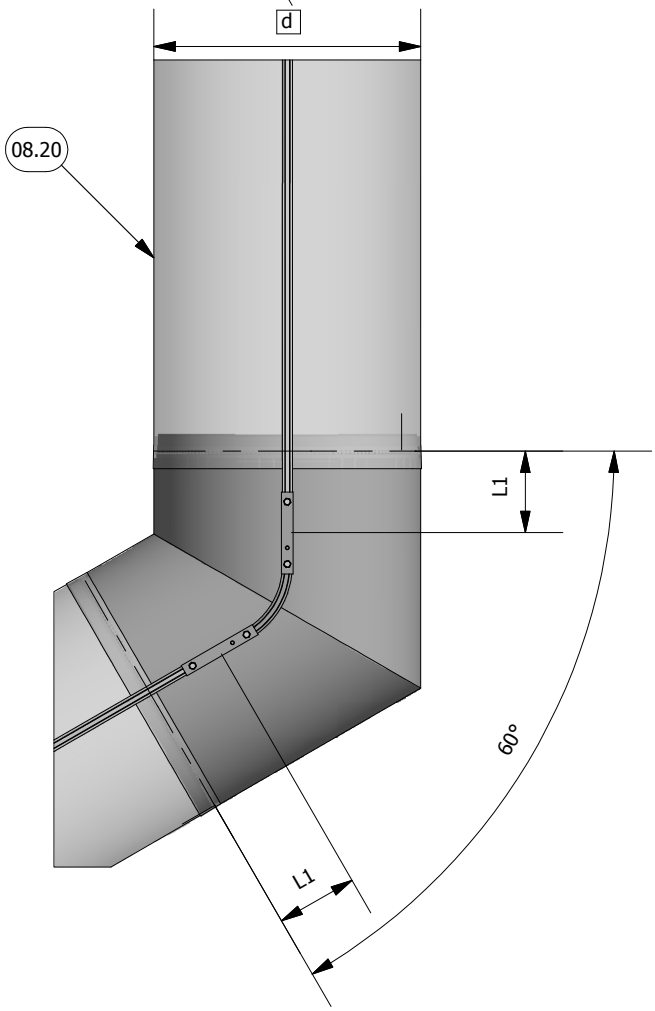

08.42

Type 8 and type 8 all in one
FabricAir® Installation Drawing
2003-0842-000 (2019-SEP)

15°

d-Duct Diam.[inch]	d-Duct Diam.[mm]	L1
	100	-44
	160	-36
	200	-31
8	205	-30
	250	-24
10	255	-23
	300	-18
12	305	-17
	315	-16
14	360	-10
	400	-4
16	410	-3
	450	2
18	460	4
	500	9
20	510	10
22	560	17
	600	22
24	610	23
	630	26
26	660	30
	710	36
28	715	37
30	765	44
	800	48
32	815	50
34	865	57
	900	61
36	915	63
38	965	70
	1000	75
40	1020	77
42	1070	84
	1100	88
44	1120	90
46	1170	97
	1200	101
48	1220	104
	1250	108
50	1270	110
	1300	114
52	1320	117
	1400	127
56	1425	131
58	1480	138
	1500	140
60	1525	144
62	1580	151
	1600	154
64	1630	158
66	1680	164
	1700	167
68	1730	171
70	1780	177
	1800	180
72	1830	184
	1900	193
76	1930	197
	2000	206
80	2035	211

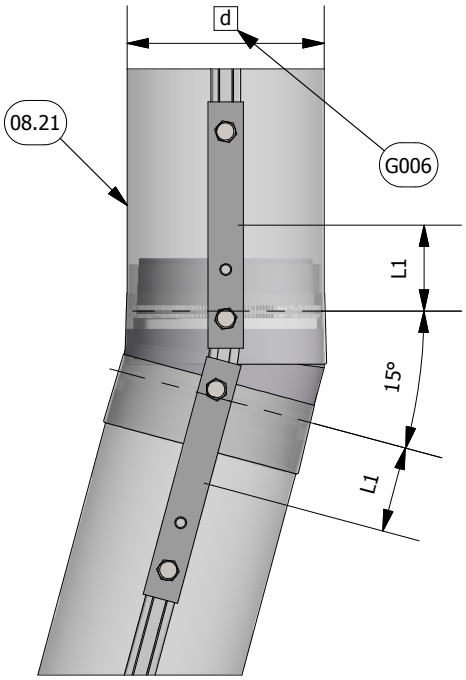

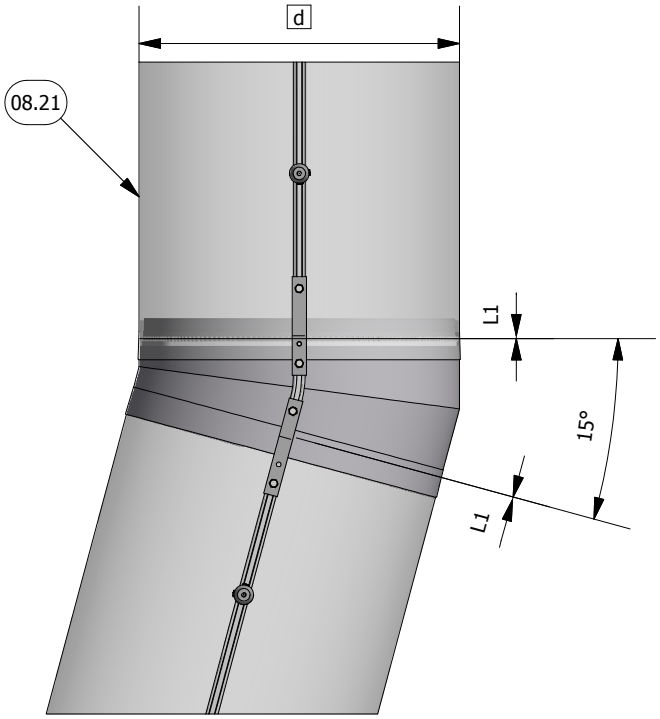

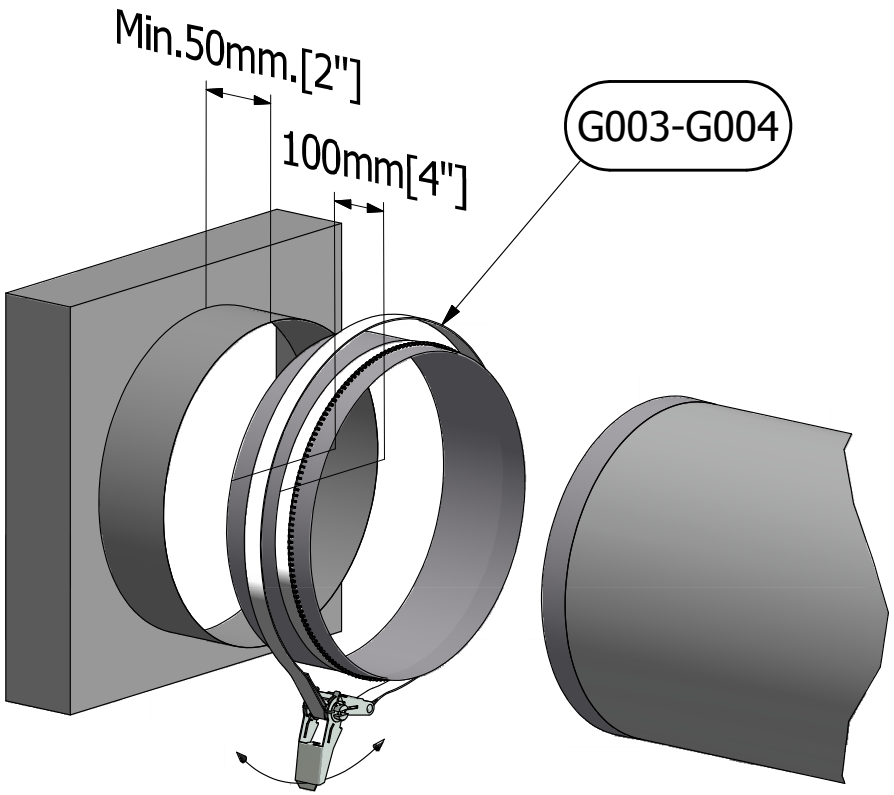

1

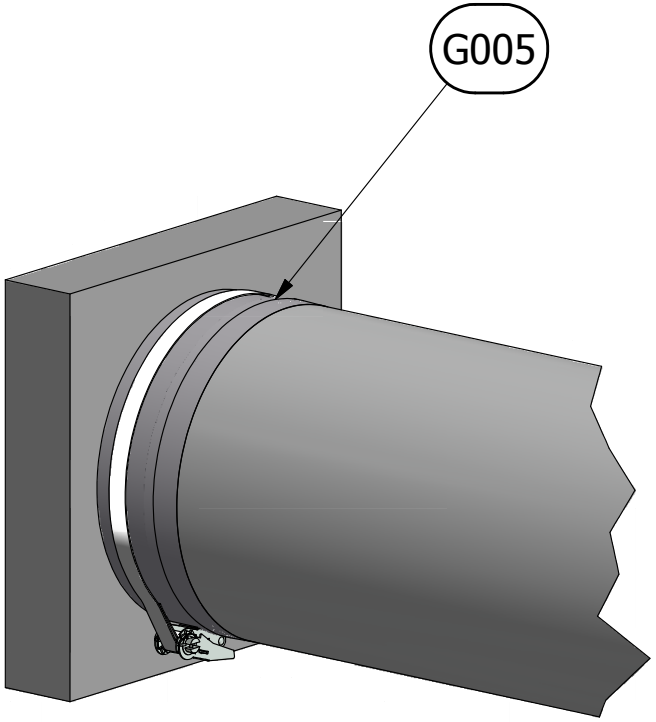

2

G001

FabricAir® Installation Drawing
2003-G001-000 (2014-FEB)

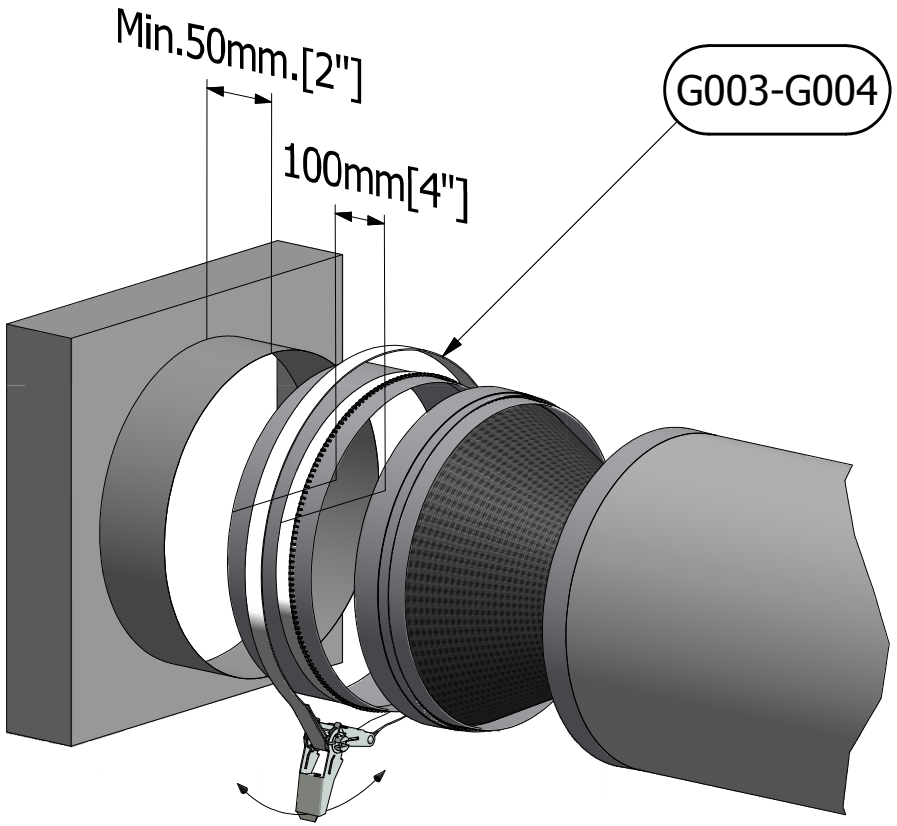

1

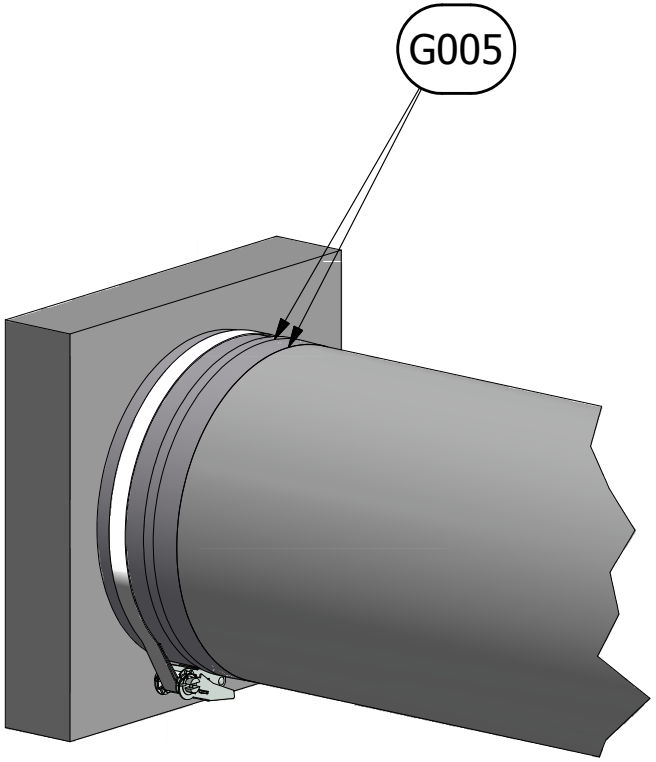

2

G002

FabricAir® Installation Drawing
2003-G002-000 (2014-FEB)

No. 17 (d < 508mm [20in])

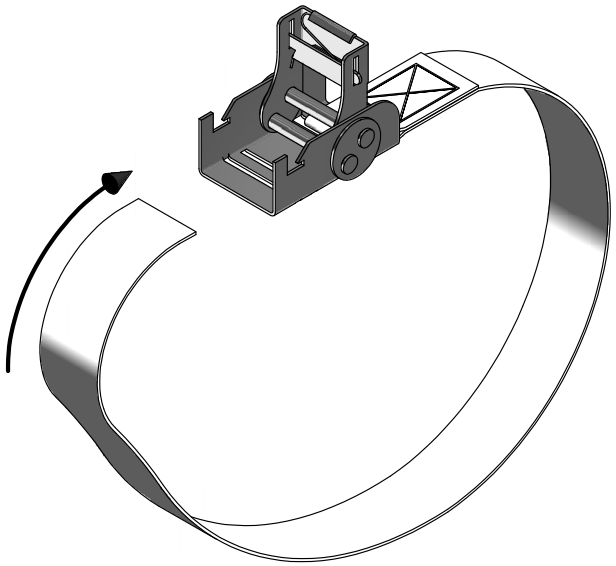

1

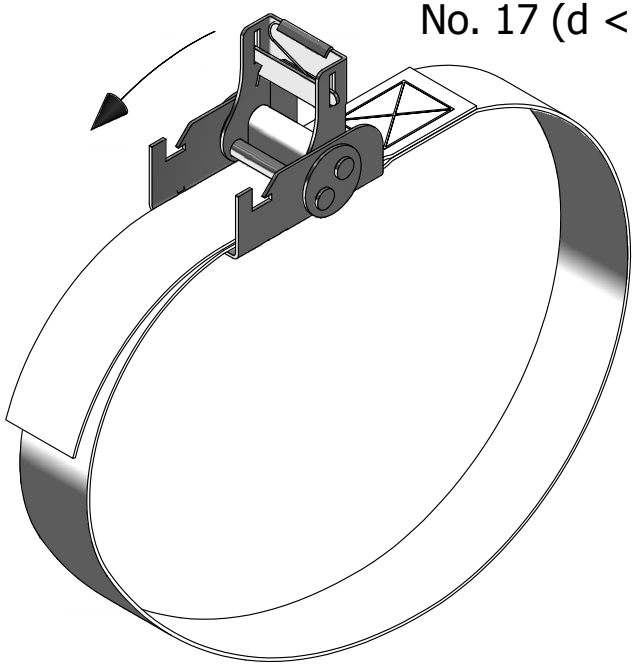

3

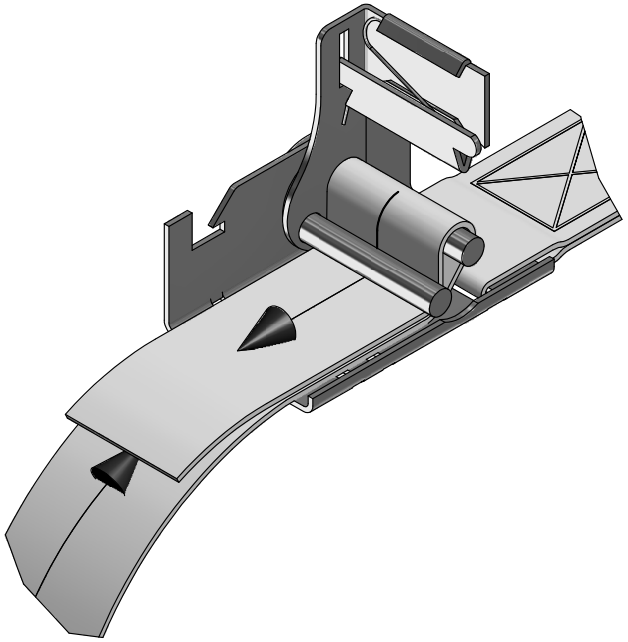

2

4

G003

FabricAir® Installation Drawing
2003-G003-000 (2014-FEB)

No. 18 (508mm [20"] < d < 2032mm[80"])

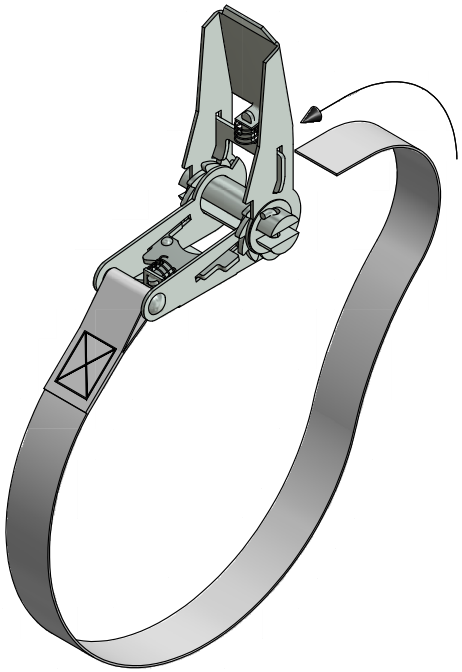

1

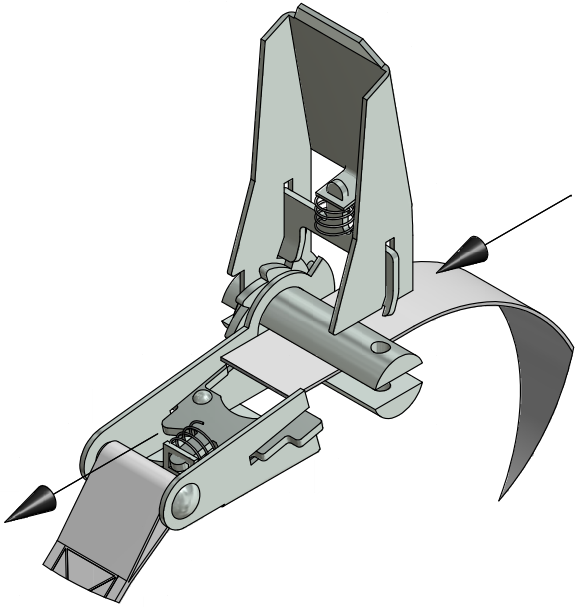

2

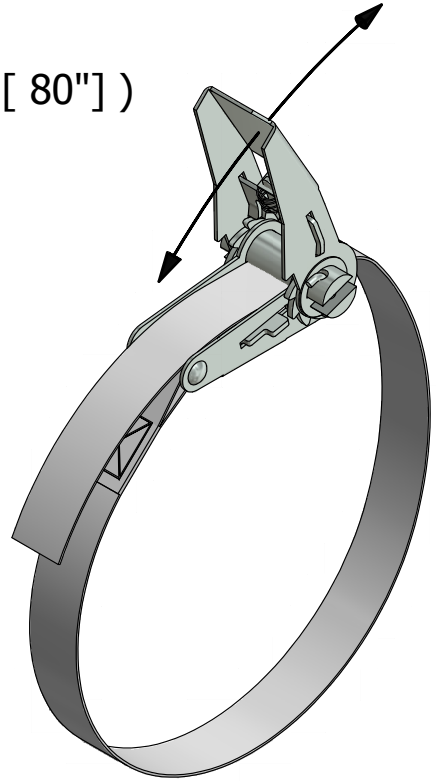

3

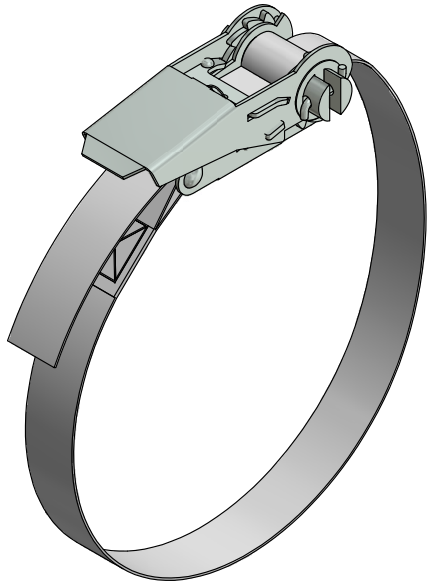

4

G004 FabricAir® Installation Drawing
2003-G004-000 (2014-FEB)

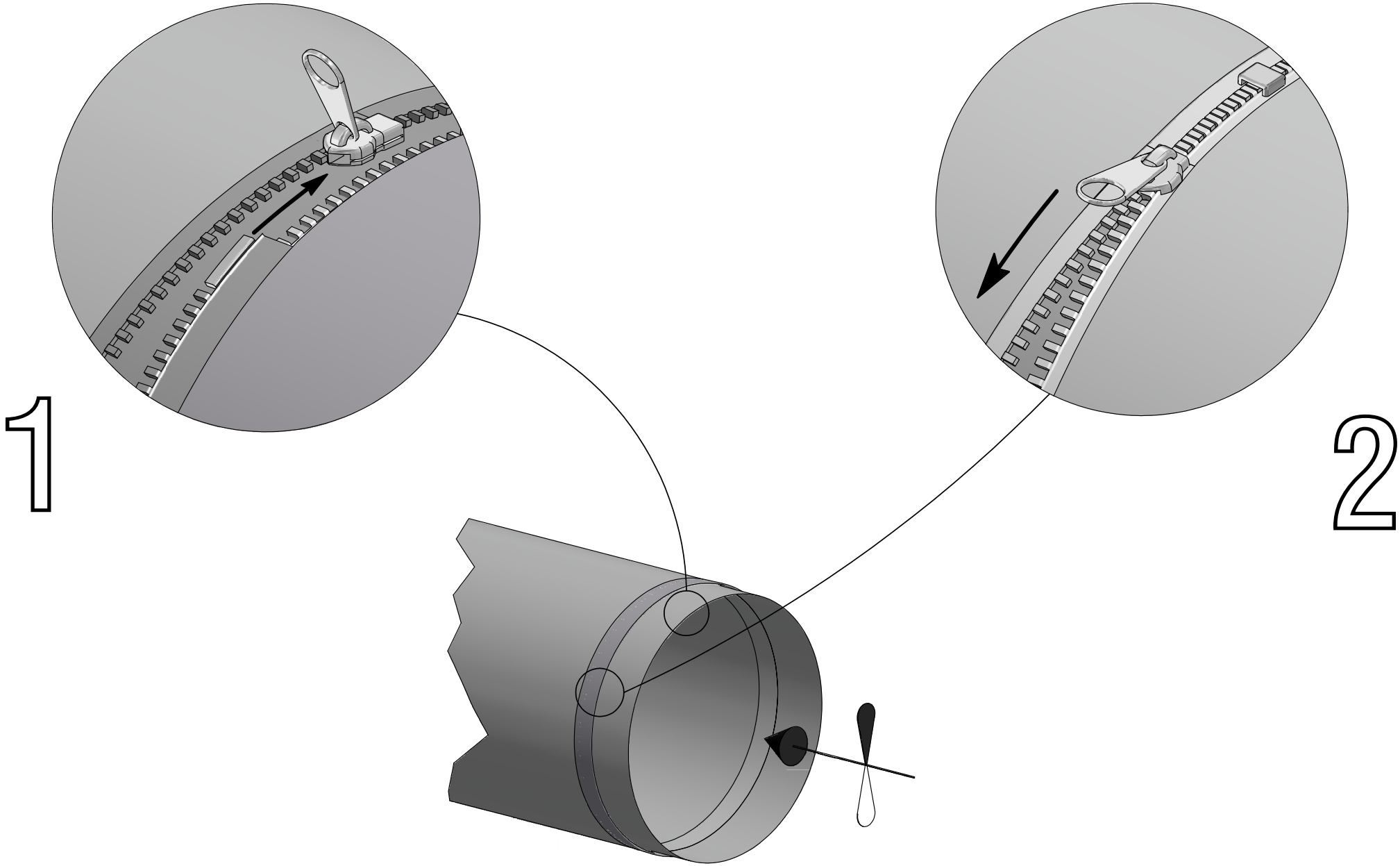

G005

FabricAir® Installation Drawing
2003-G005-000 (2014-FEB)

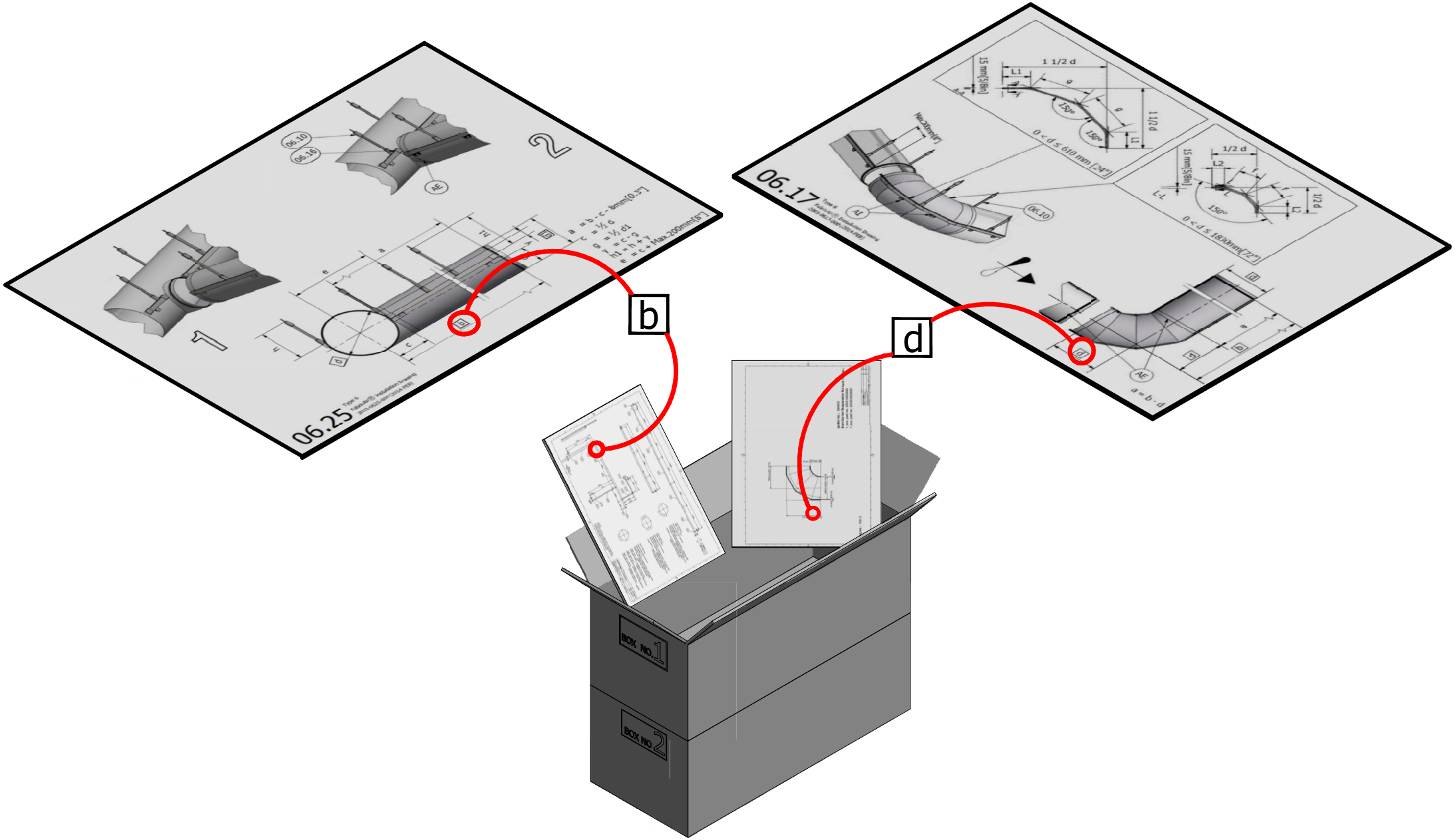

Note:
The Dimensions given in squares can be found in system drawing which is in box 1 .

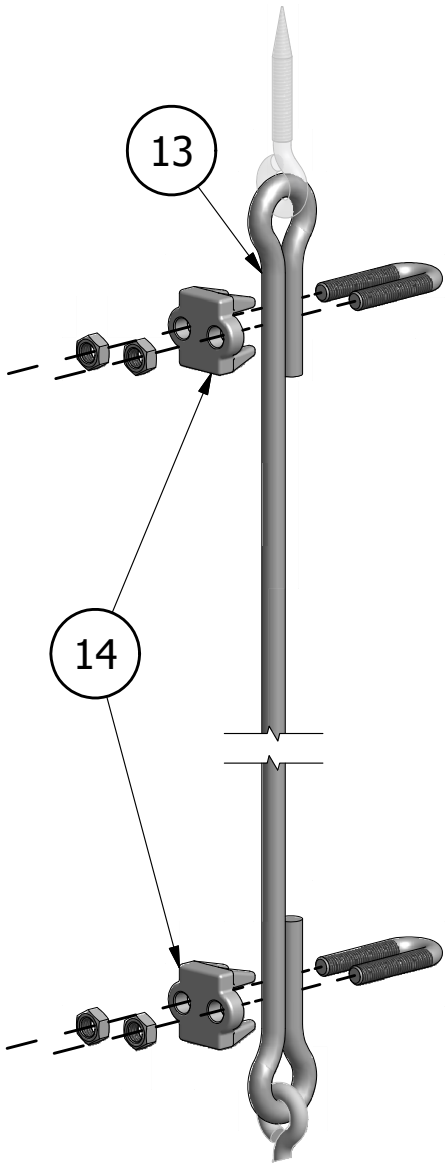

1

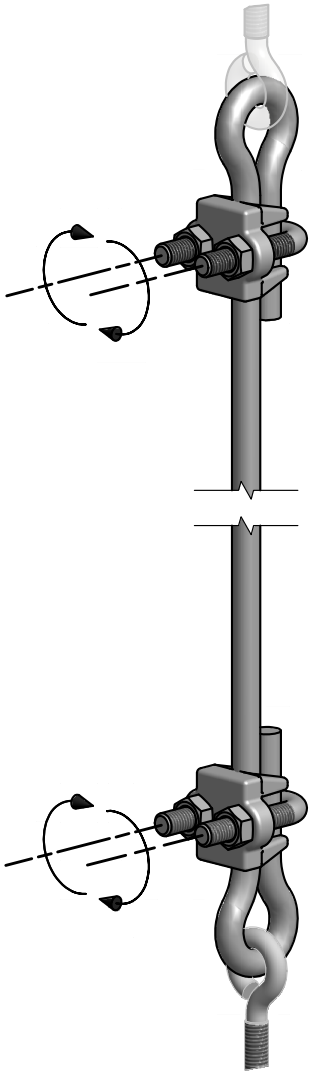

2

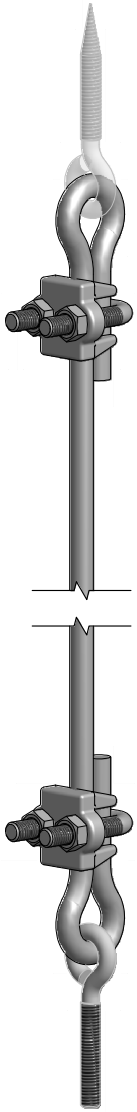

3

G007

FabricAir® Installation Drawing
2003-G007-000 (2014-FEB)

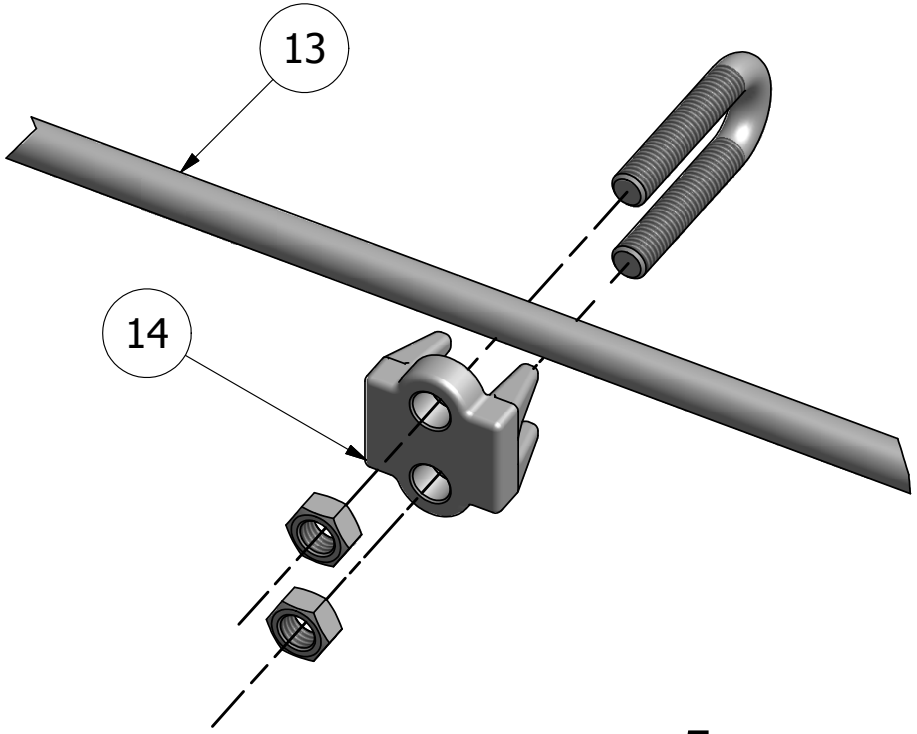

1

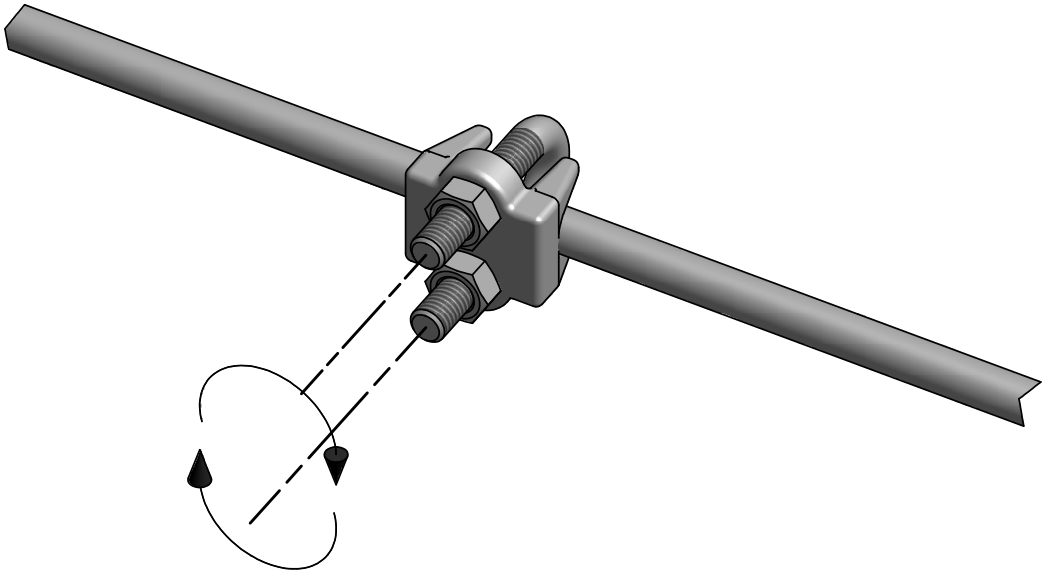

2

G008

FabricAir® Installation Drawing
2003-G008-000(2014-FEB)

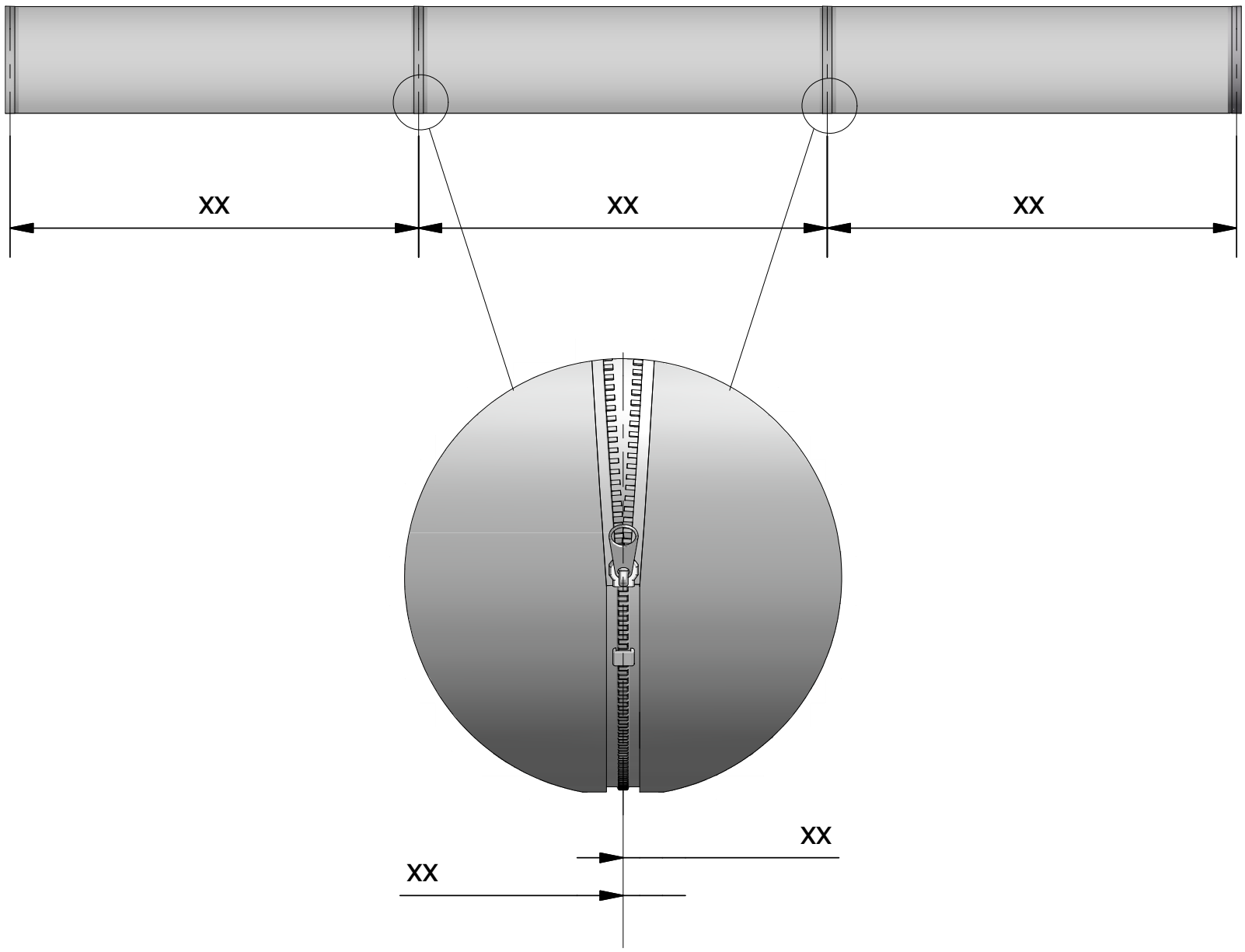

G025

FabricAir® Installation Drawing
2003-G025-000 (2015-JUN)

ASSEMBLY

1

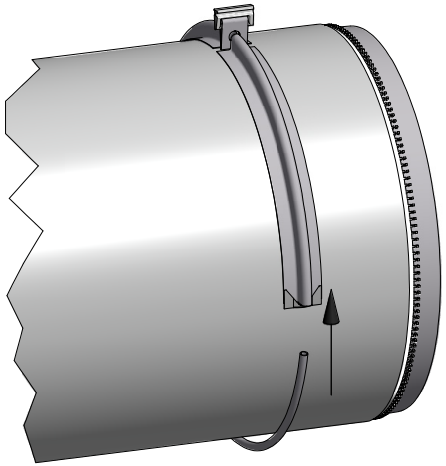

2

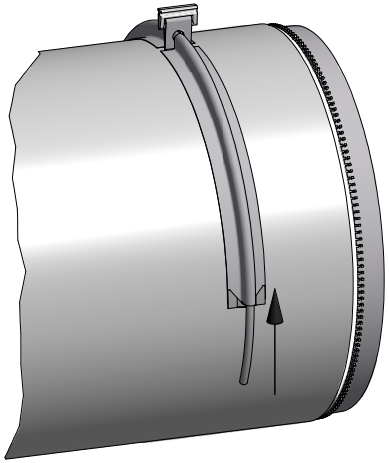

3

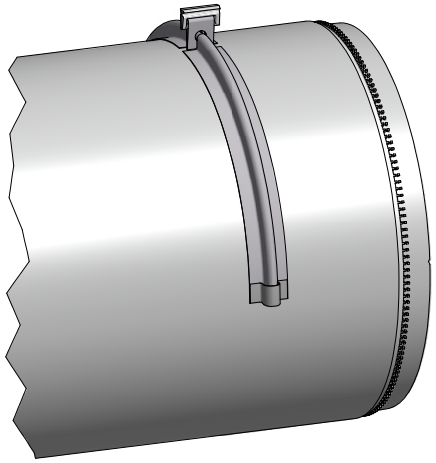

DISASSEMBLY

1

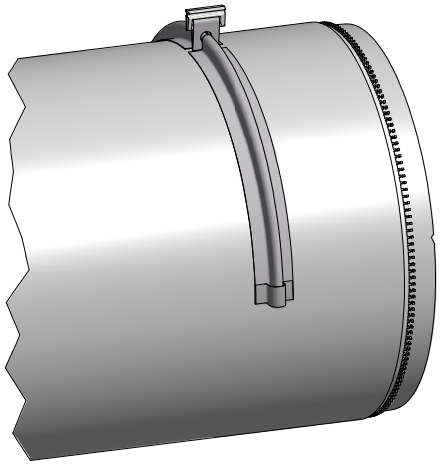

2

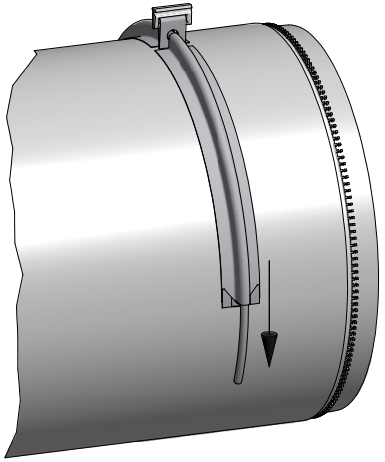

3

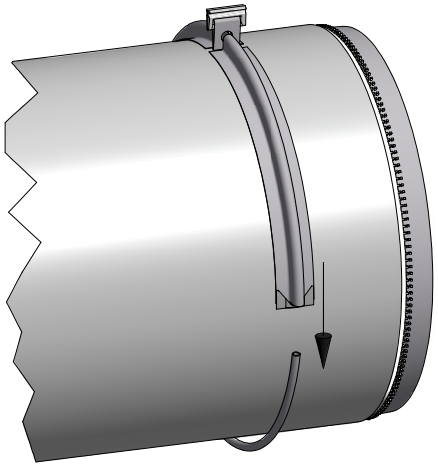

G027

FabricAir® Installation Drawing
2003-G027-000 (2014-FEB)

FabricAir

ORDER NO : 1473677

CONTENTS OF BOX NO. 1/2:

INSTRUCTION BAG	1 pcs.
-Drawing Included	1 pcs.

Distribution Ducts

Tag no. 100.1 Inlet Ø 1060 x 100	2 pcs.
Tag no. 100.2 Inlet Ø 1060 x 2625	2 pcs.
Tag no. 100.5 Inlet Ø 500 x 1000 x 9330	2 pcs.

Suspensions

(05) STRETCHER M6 x 90,GV	12 pcs
(14) CABLE LOCK 5MM,GV	52 pcs
(18) FIXING	2 pcs

STRAP , Y/2 , Ø 1100 / 43.3 "W

Box weight : 31 kg

Box size : 780x380x500mm

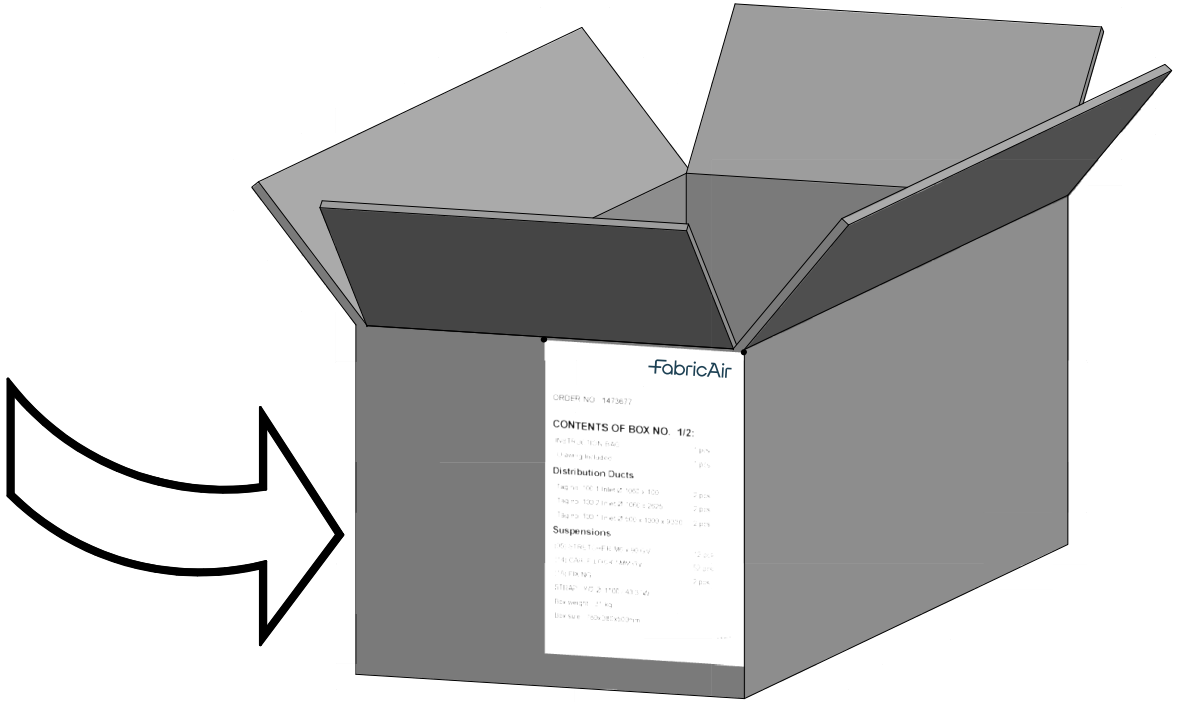

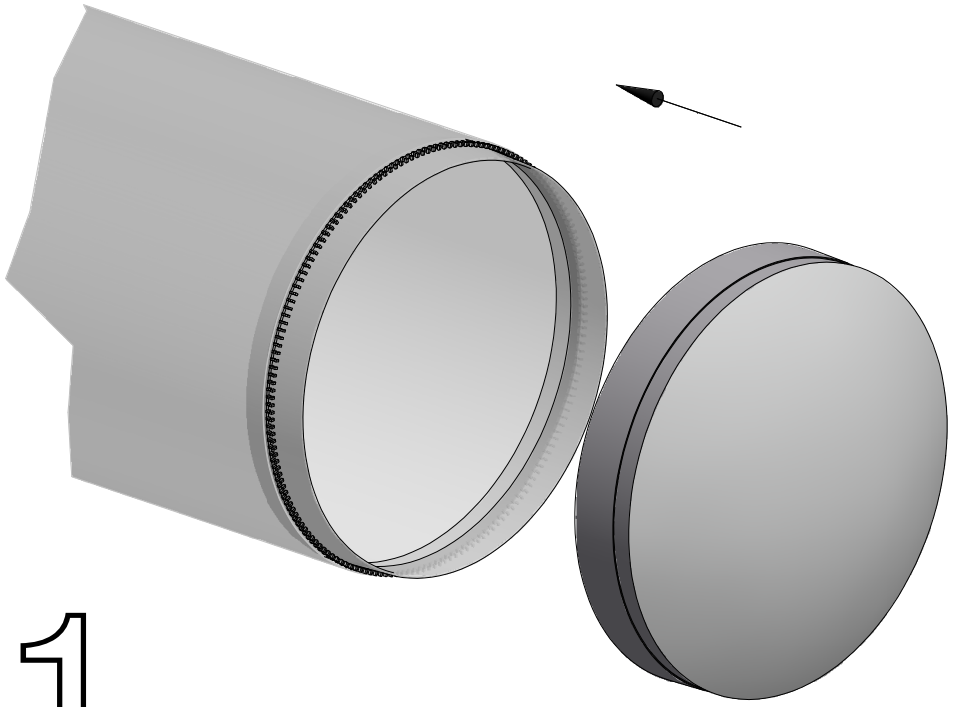

1

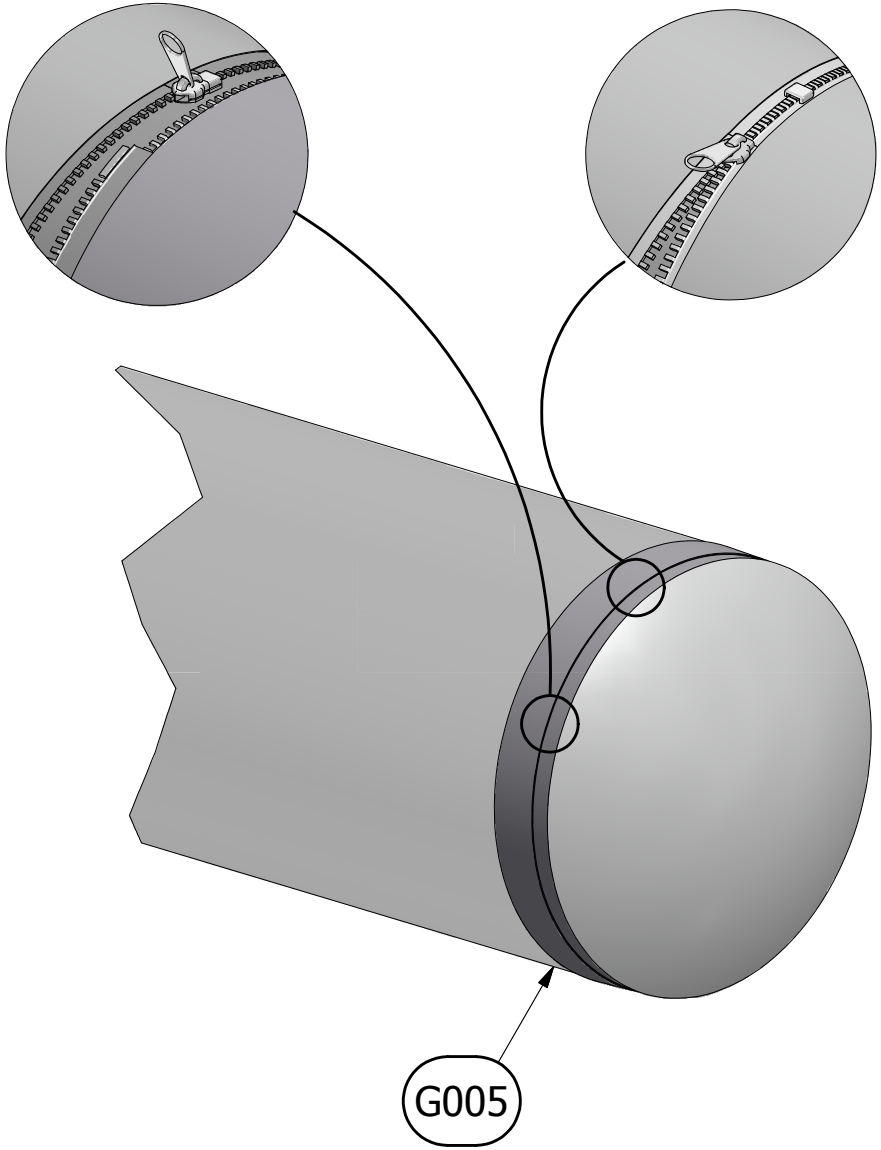

2

G036

FabricAir® Installation Drawing
2003-G036-000 (2015-JUN)

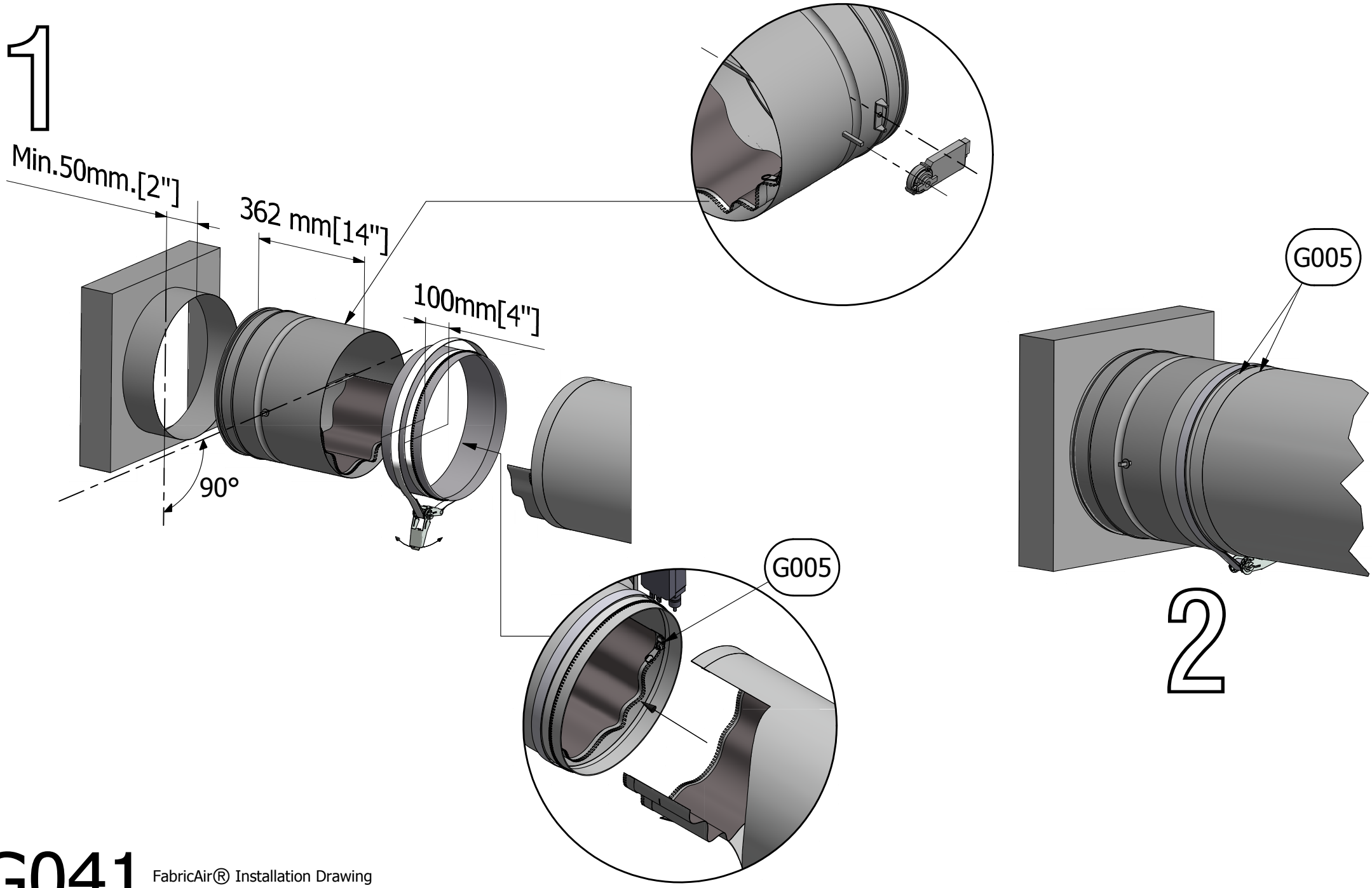

G041

FabricAir® Installation Drawing
2003-G002-000 (2019-SEP)

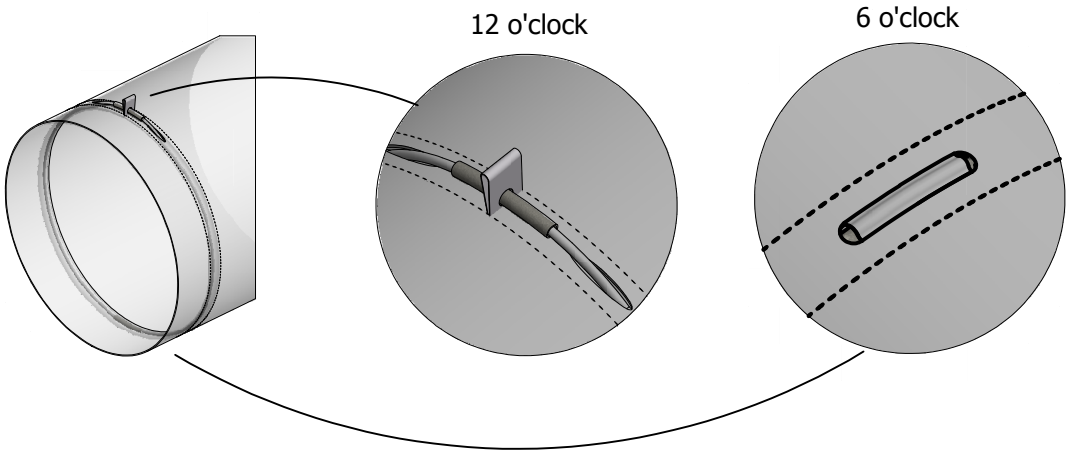

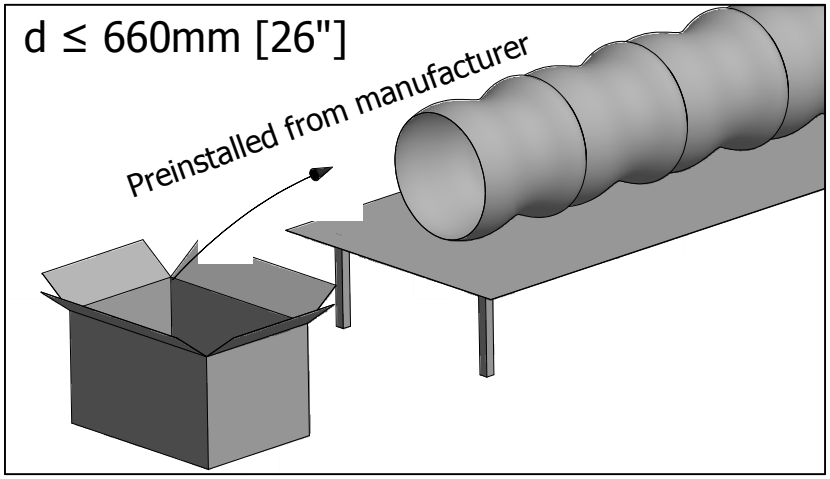

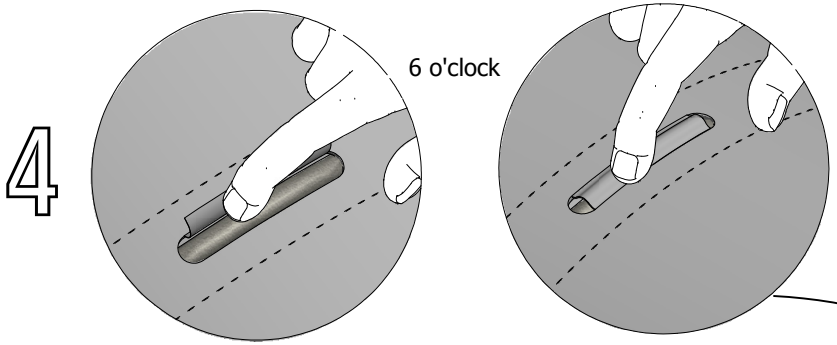

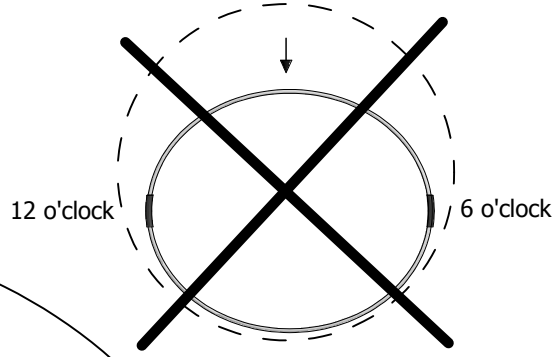

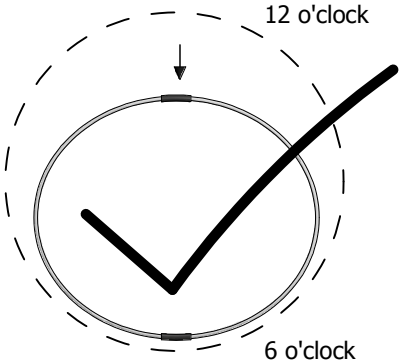

660mm [26"] < d ≤ 1270mm [50"]

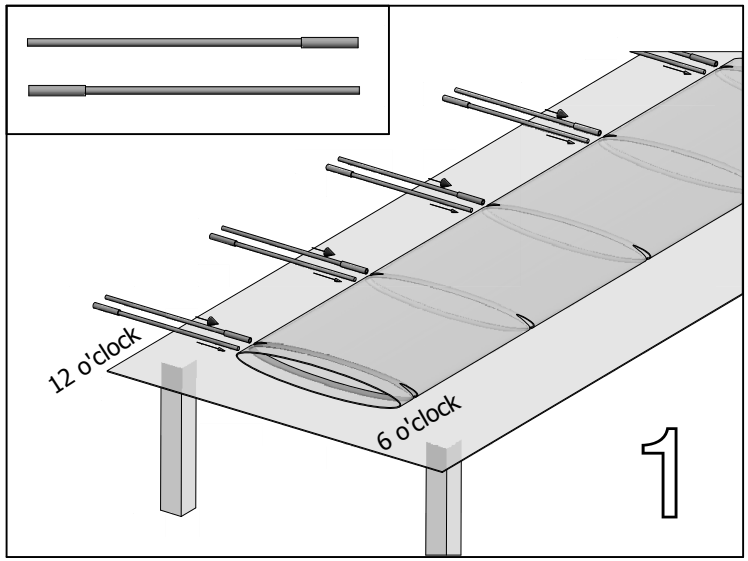

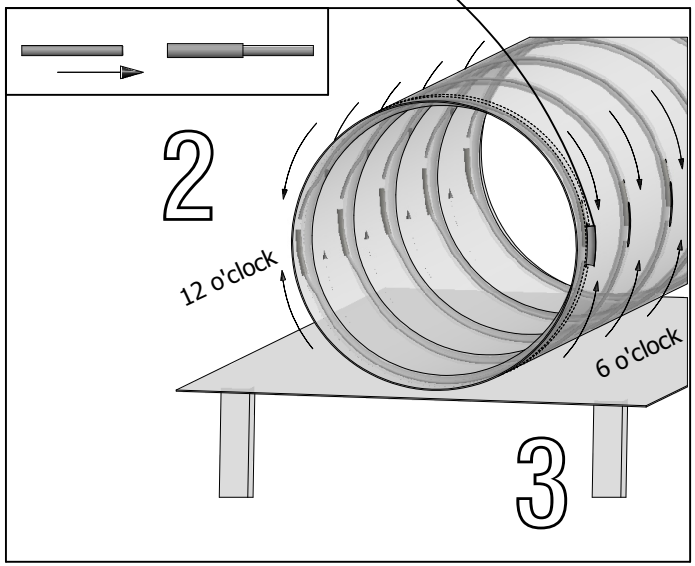

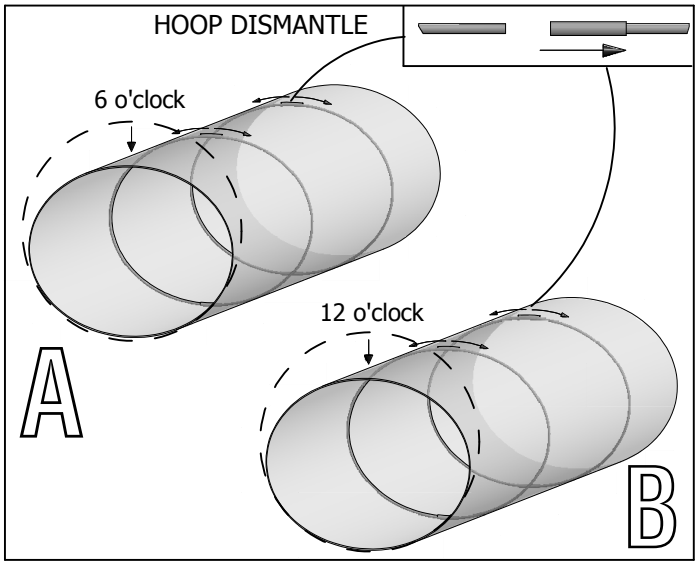

G044 FabricAir® Installation Drawing
2003-G044-000 (2019-NOV)

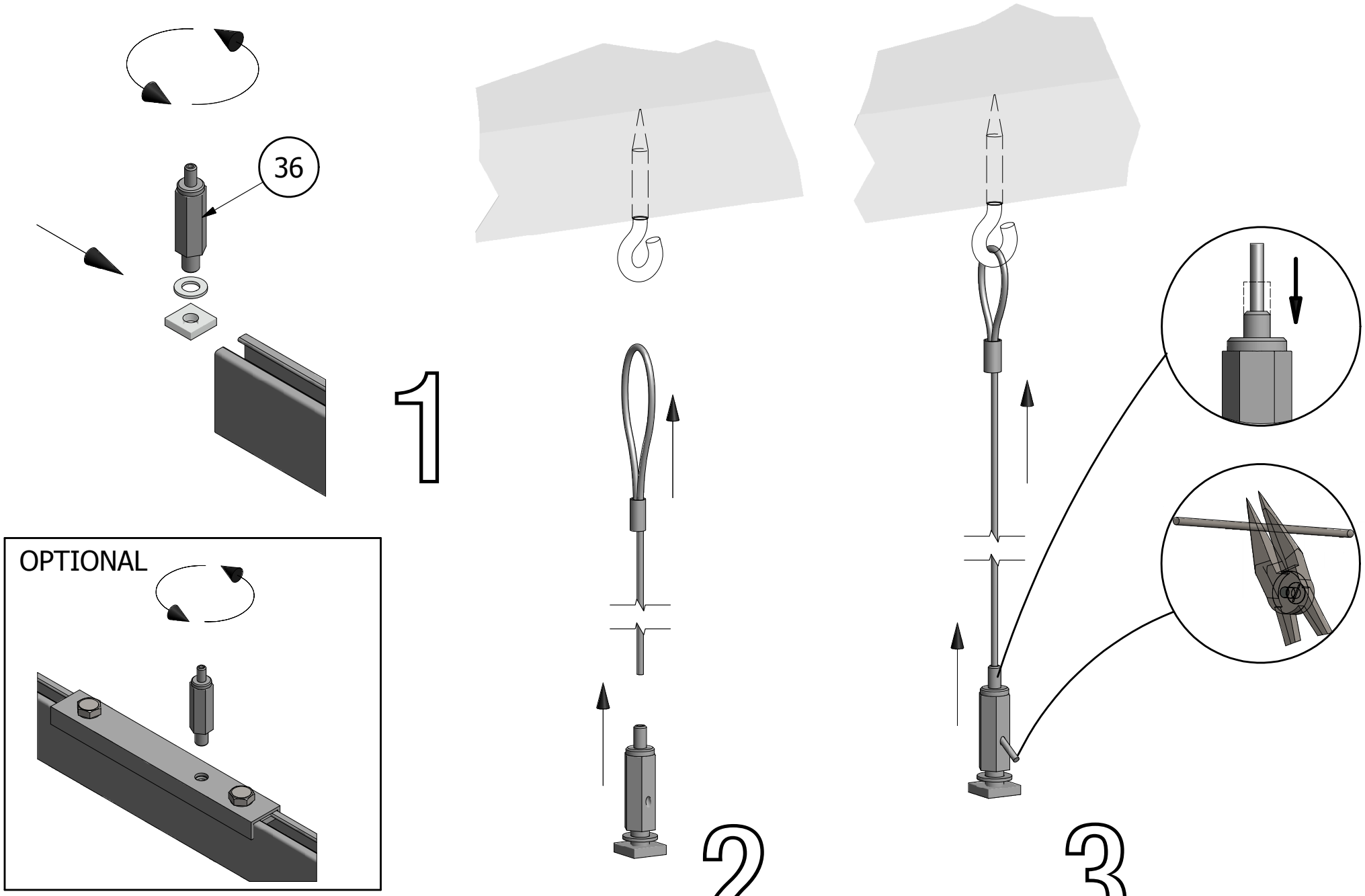

G045

FabricAir® Installation Drawing
2003-G045-000 (2020-NOV)

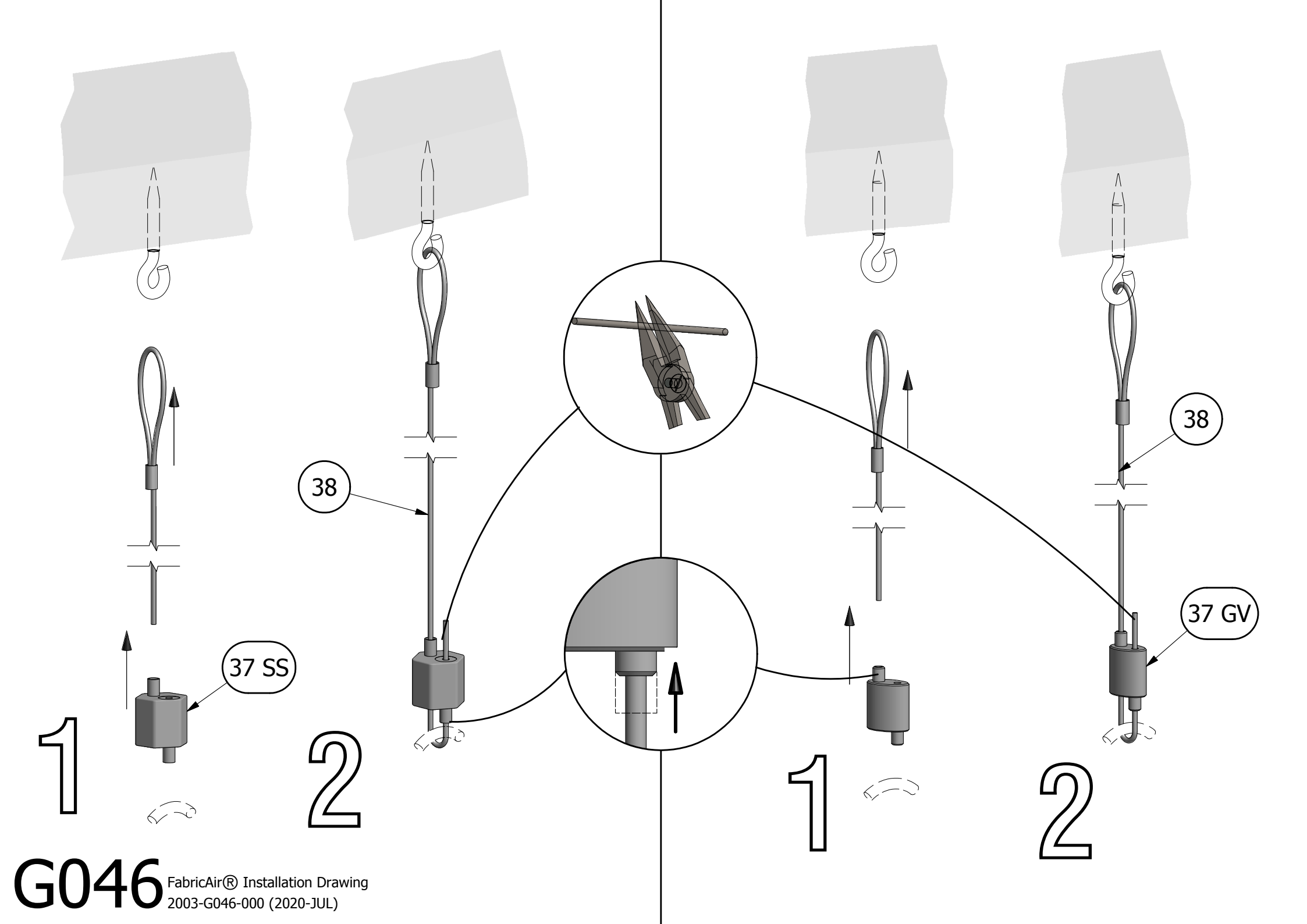

G046

FabricAir® Installation Drawing
2003-G046-000 (2020-JUL)

Installation of M8 Rod to H-Rail

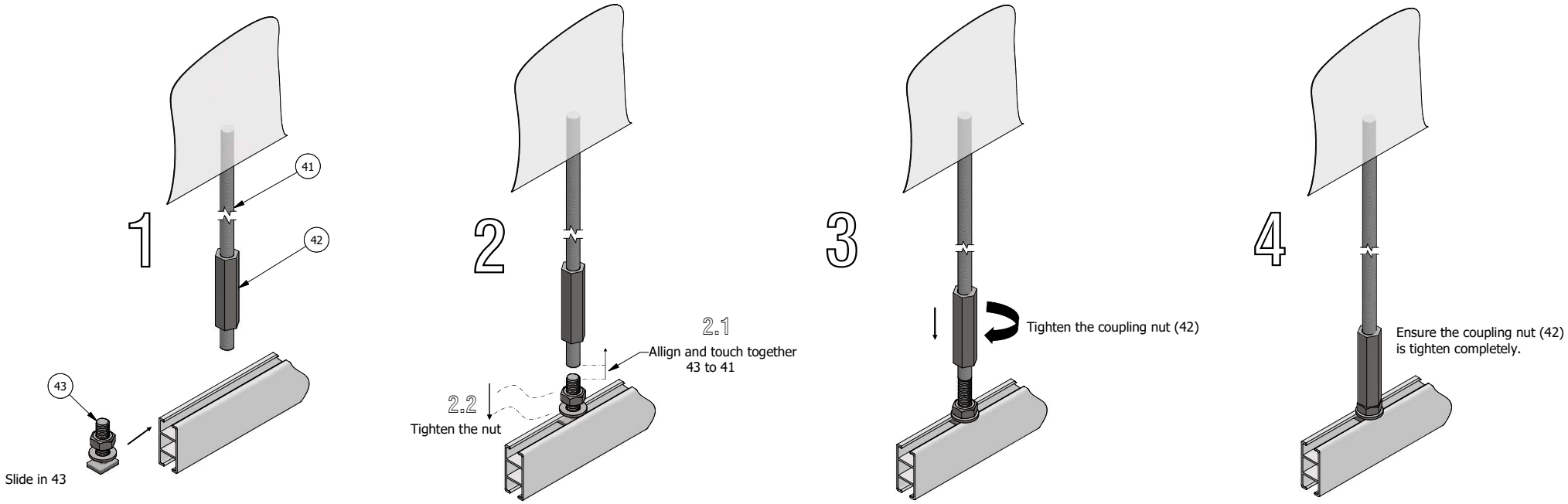

Extension Process for M8 Rod

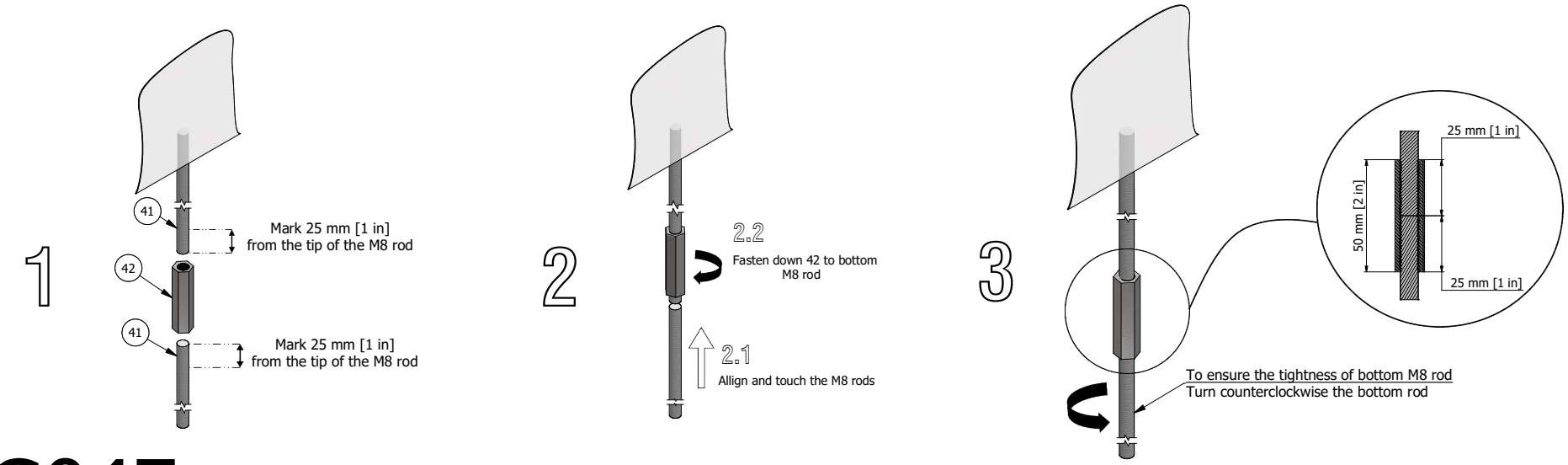

G047

FabricAir® Installation Drawing
2003-G047-000 (2022-MAY)

Installation of FabricAir® Taut Endcap

1

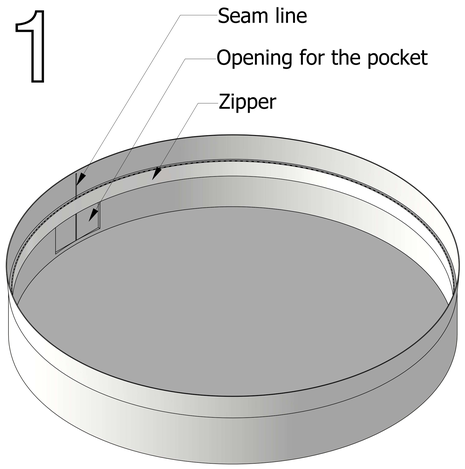

Lay the end cap flat on a clean surface

2

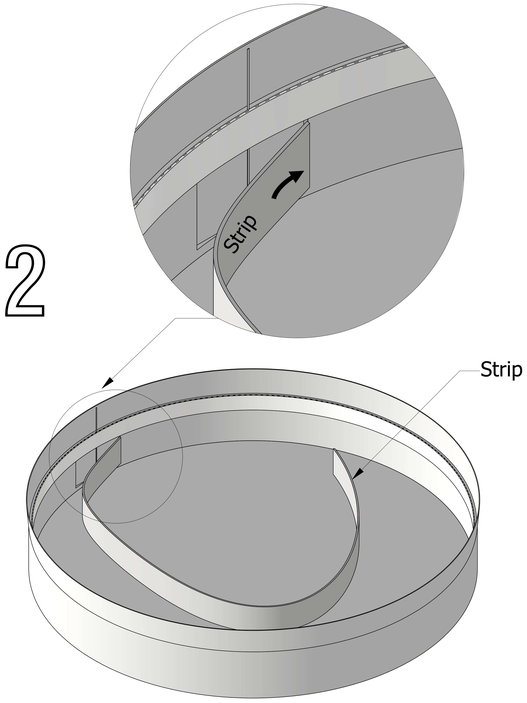

Push the strip in the pocket all around the end cap

3

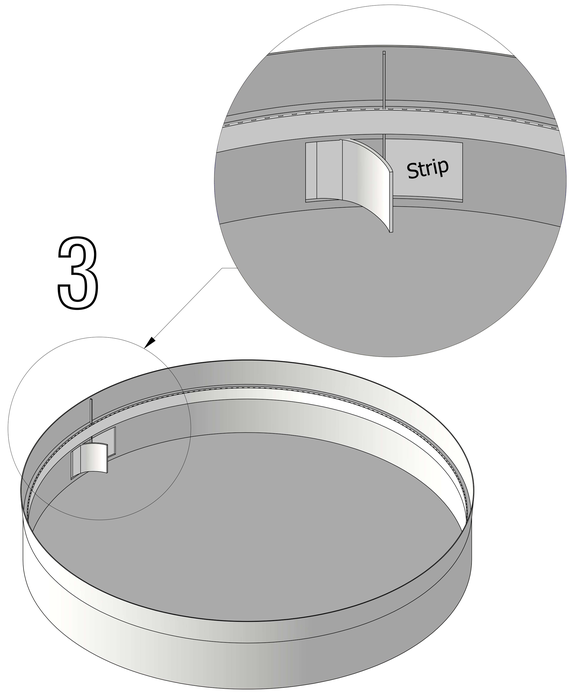

Align one end of the strip with the seam line

4

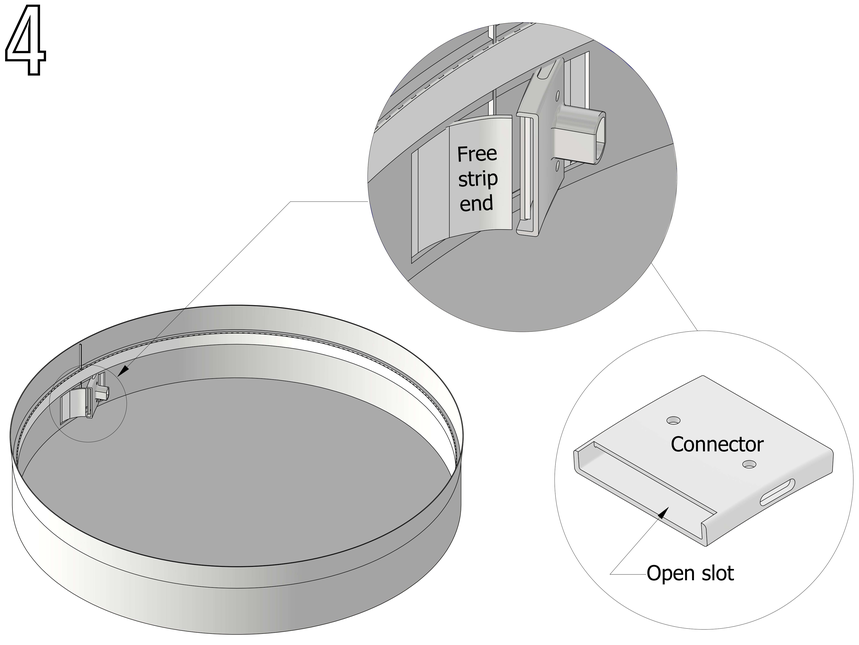

Put connector on the aligned strip end with the open slot towards the free strip end

5

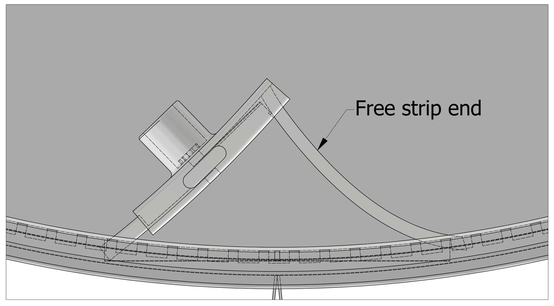

5.1 Place the free strip end in the open slot

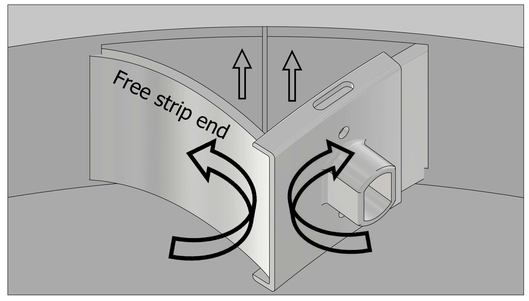

5.2 Hold the connector and the free strip end together and push until both strip ends are aligned

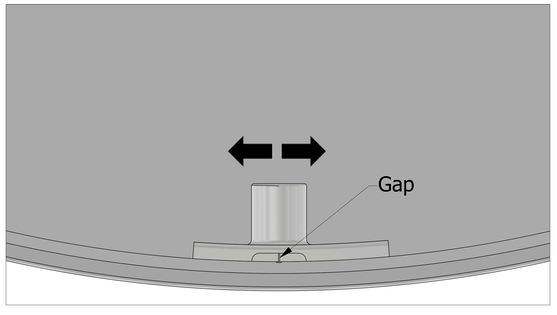

5.3 Using the knob slide the connector and make sure the gap between both strip ends is in the center of the connector

G049

Type 1
FabricAir® Installation Drawing
2003-G049-000 (2022- September)

Installation Video