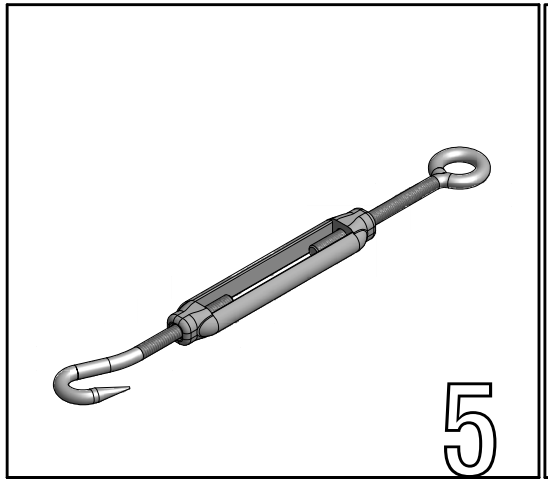

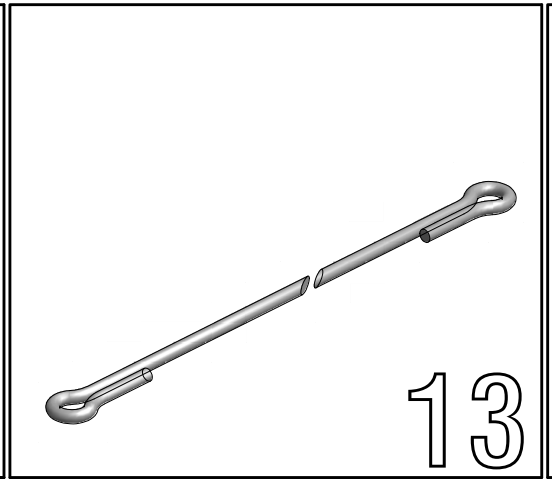

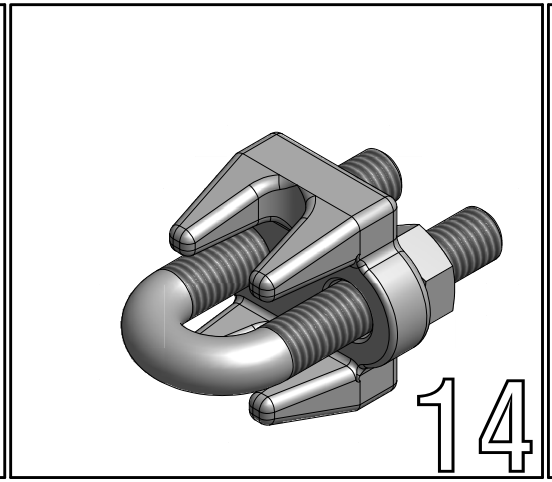

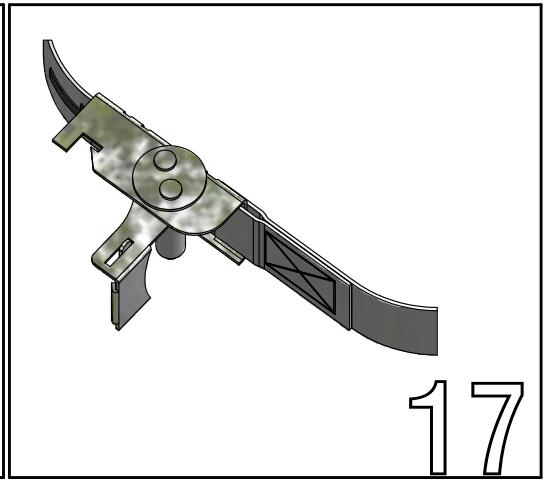

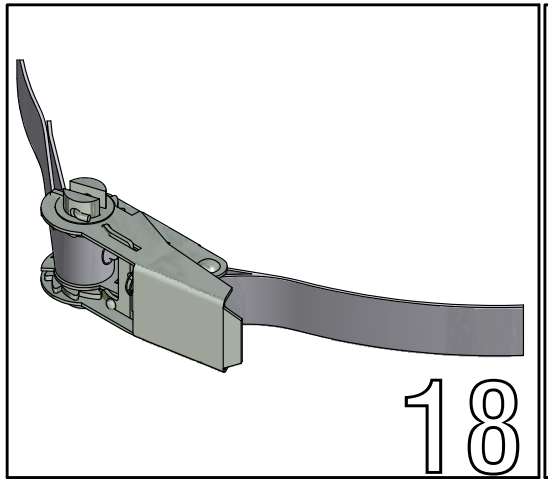

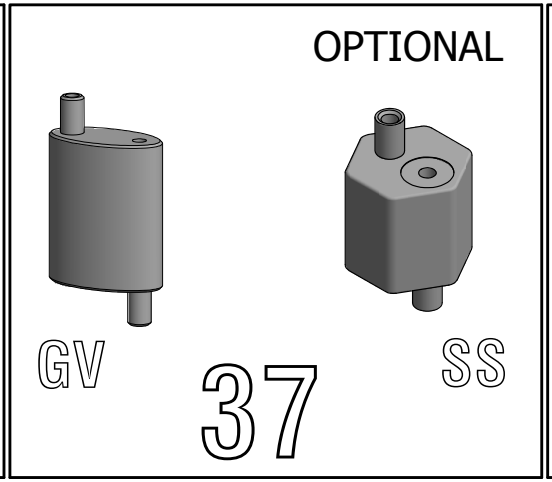

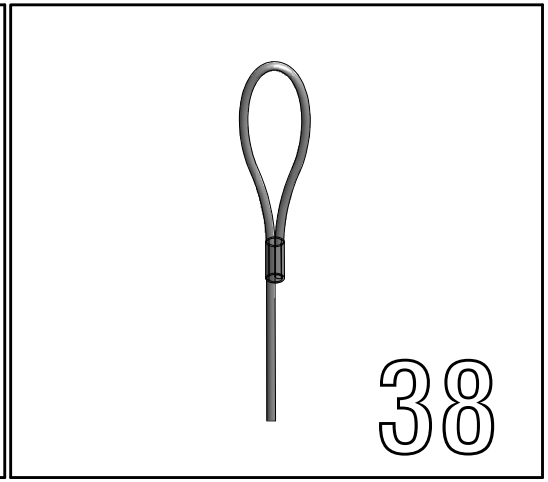

01.01

Type 1 , Standard Parts

FabricAir® Installation Drawing

2003-0101-000 (2020-JUL)

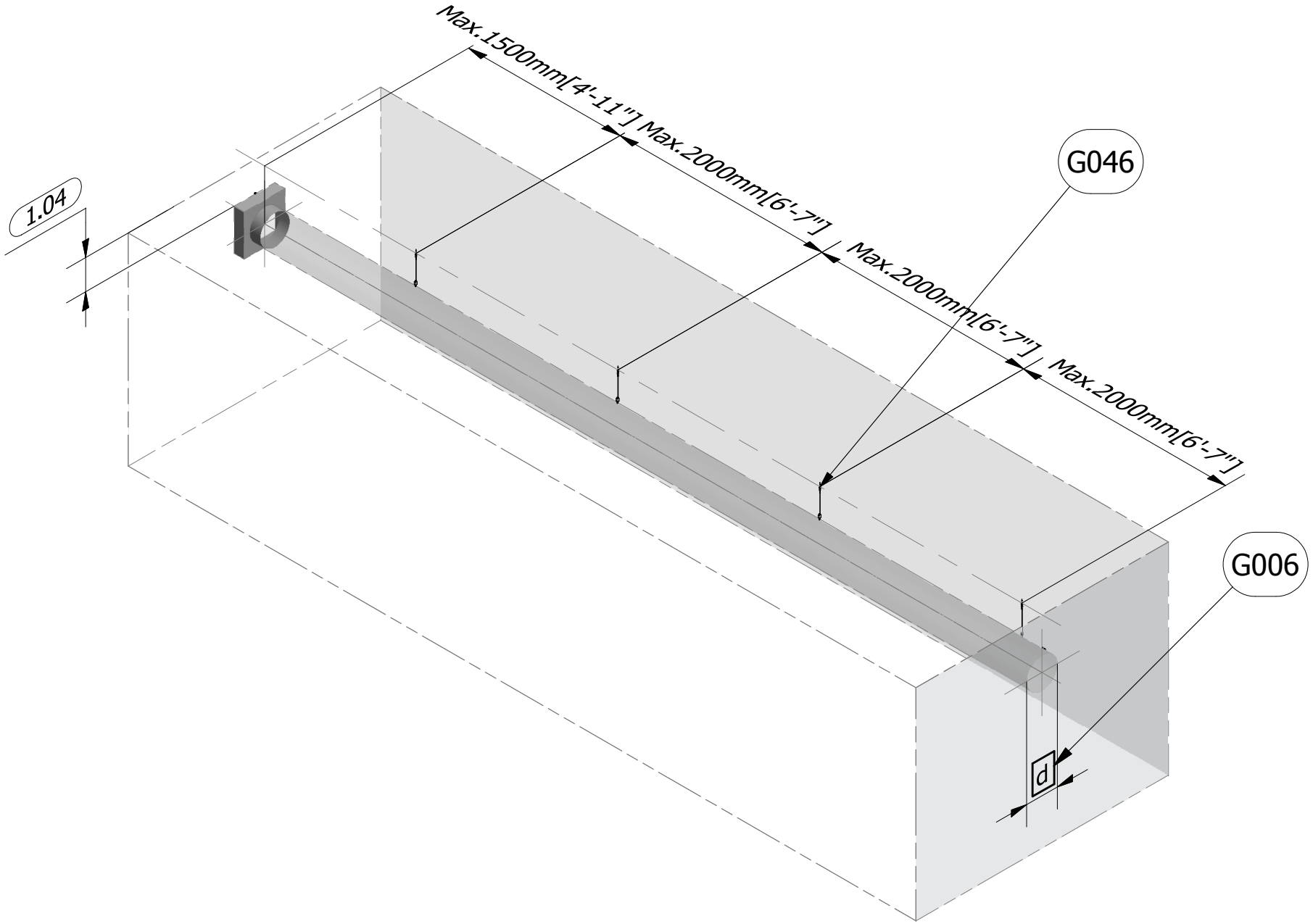

01.02

Type 1
FabricAir® Installation Drawing
2003-0102-000 (2020-JUL)

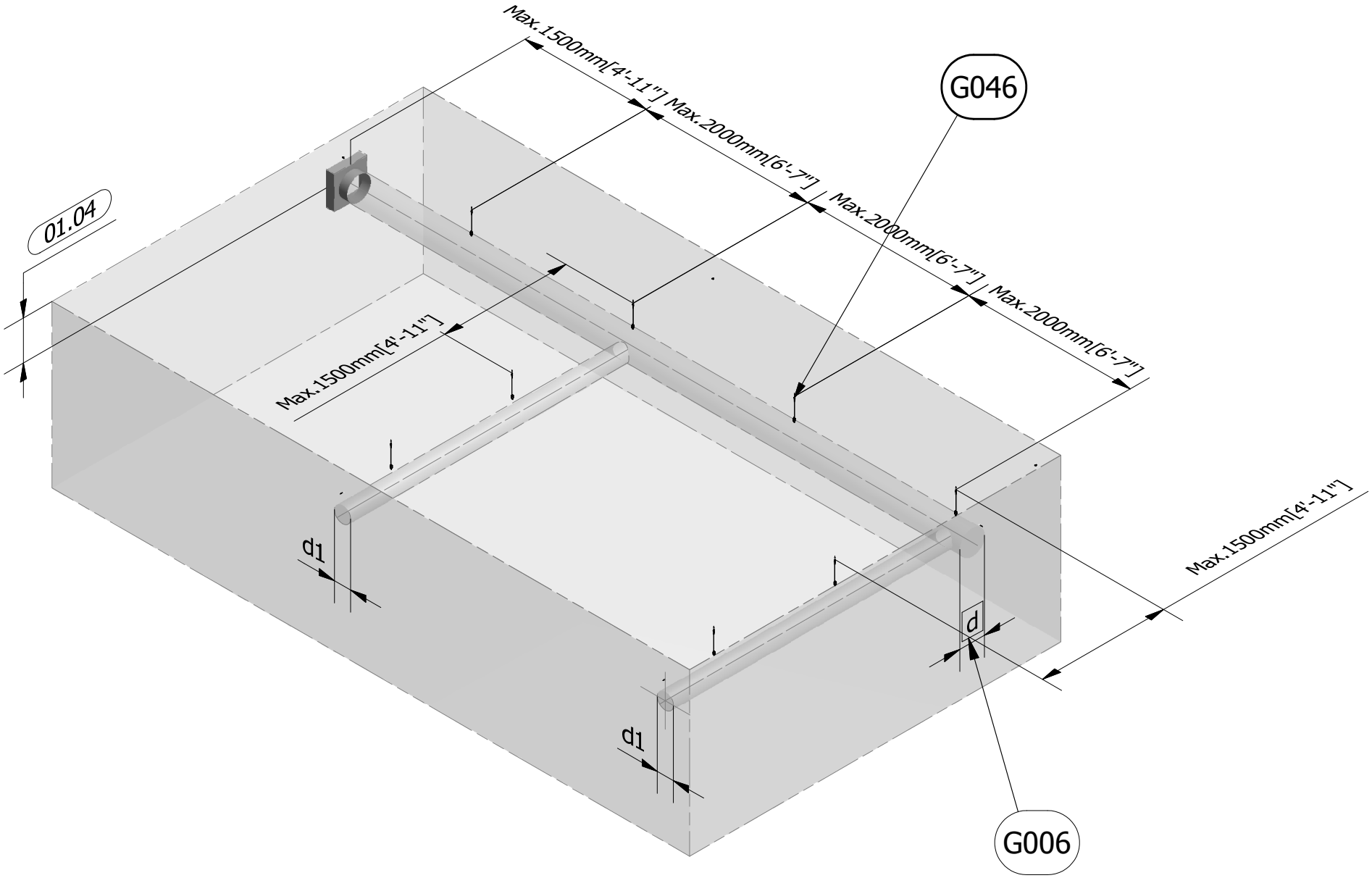

01.03

Type 1
FabricAir® Installation Drawing
2003-0103-000 (2020-JUL)

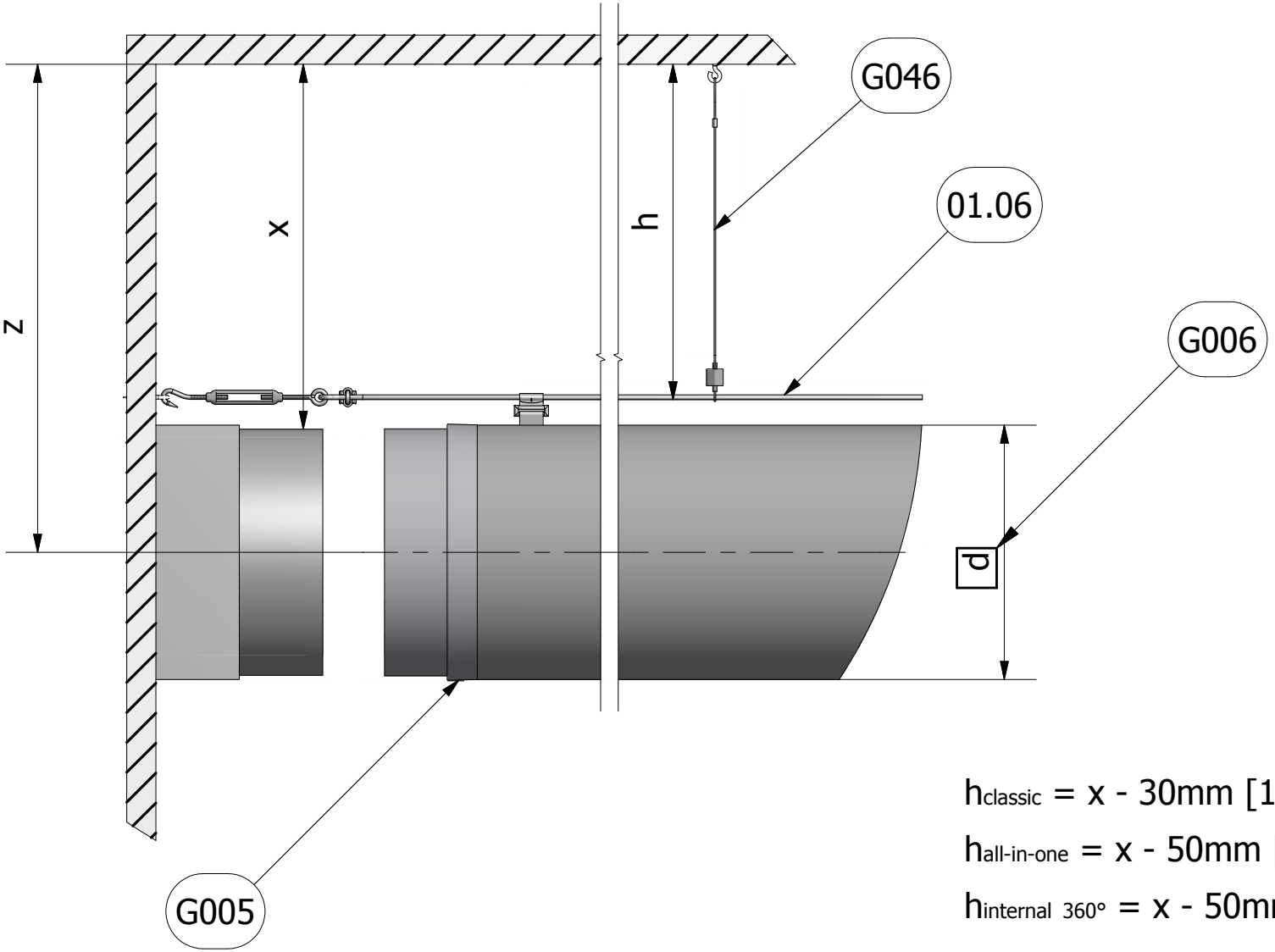

$h_{classic}$ = x - 30mm [1.2"]

$h_{all\text{-}in\text{-}one}$ = x - 50mm [2"]

$h_{internal\ 360°}$ = x - 50mm [2"]

z = x + ½ d

01.04

Type 1
FabricAir® Installation Drawing
2003-0104-000 (2020-JUL)

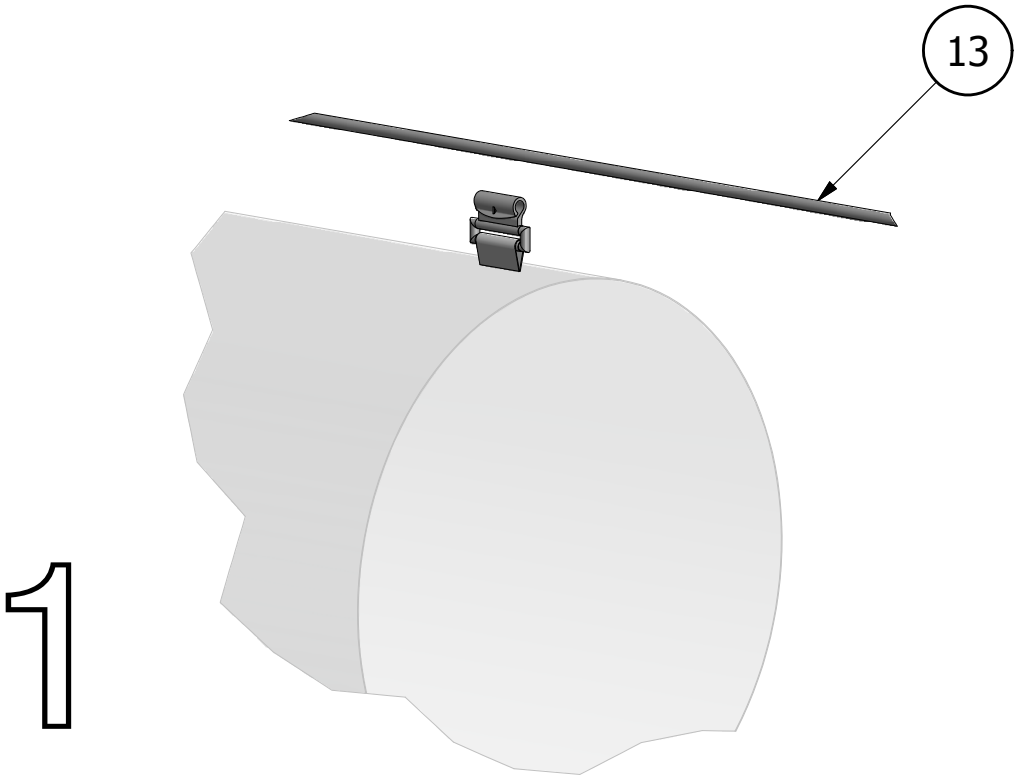

01.05

Type 1
FabricAir® Installation Drawing
2003-0105-000 (2014-FEB)

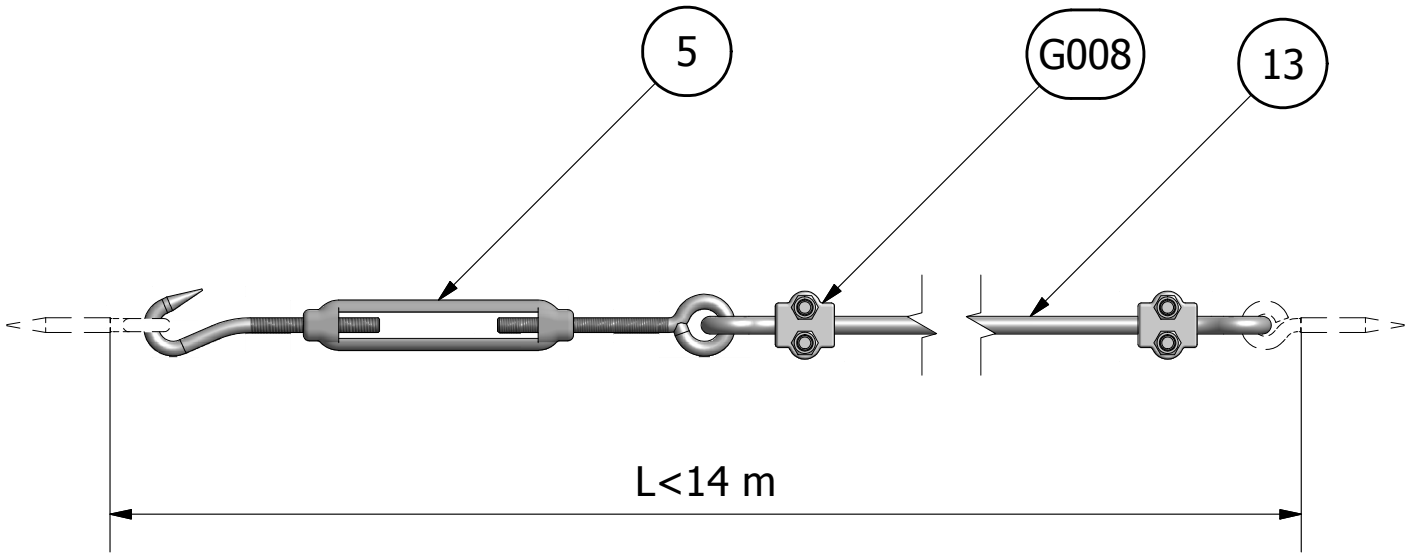

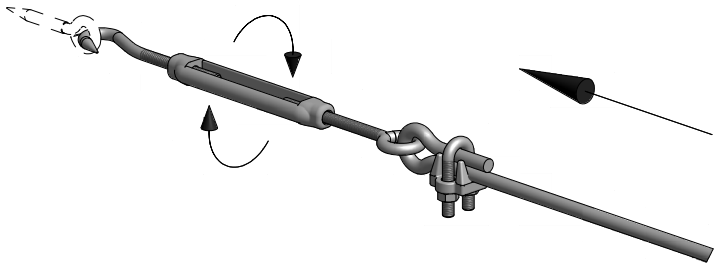

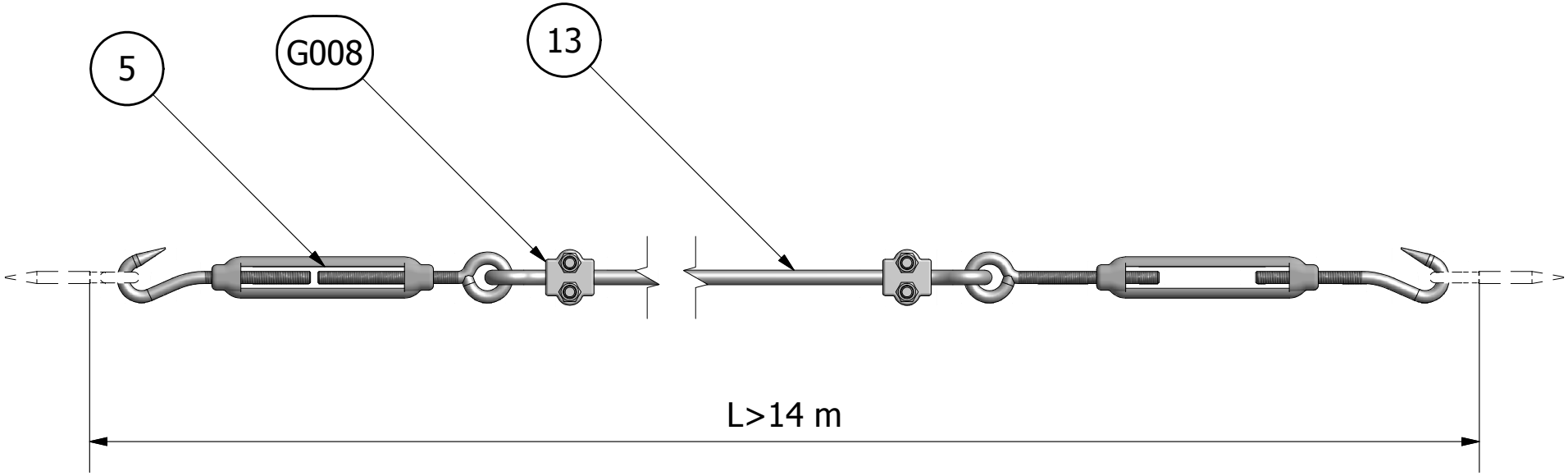

01.06

Type 1
FabricAir® Installation Drawing
2003-0106-000 (2014-FEB)

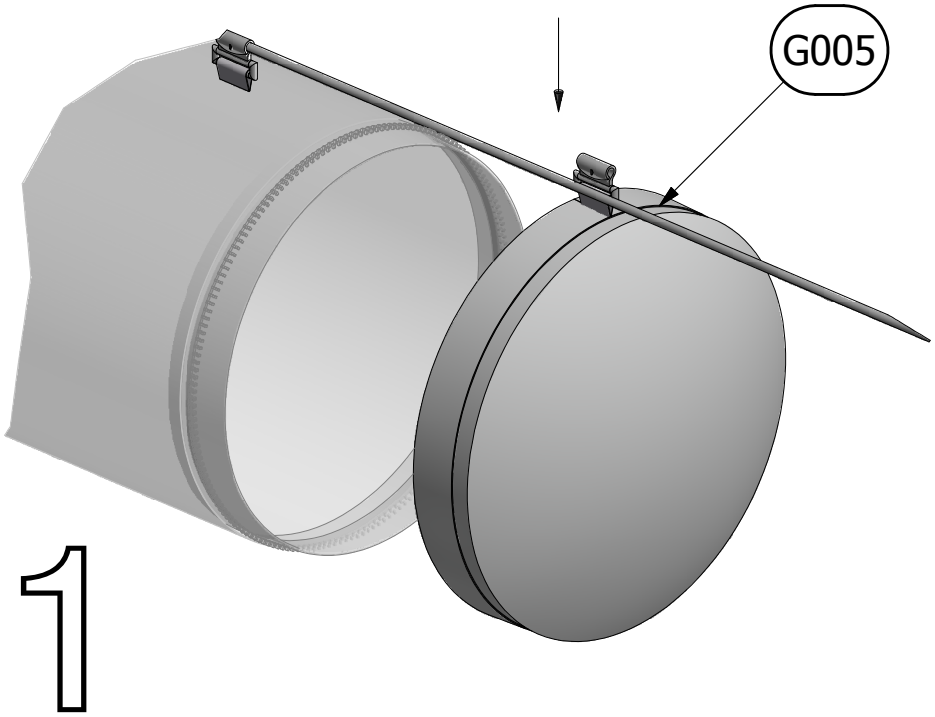

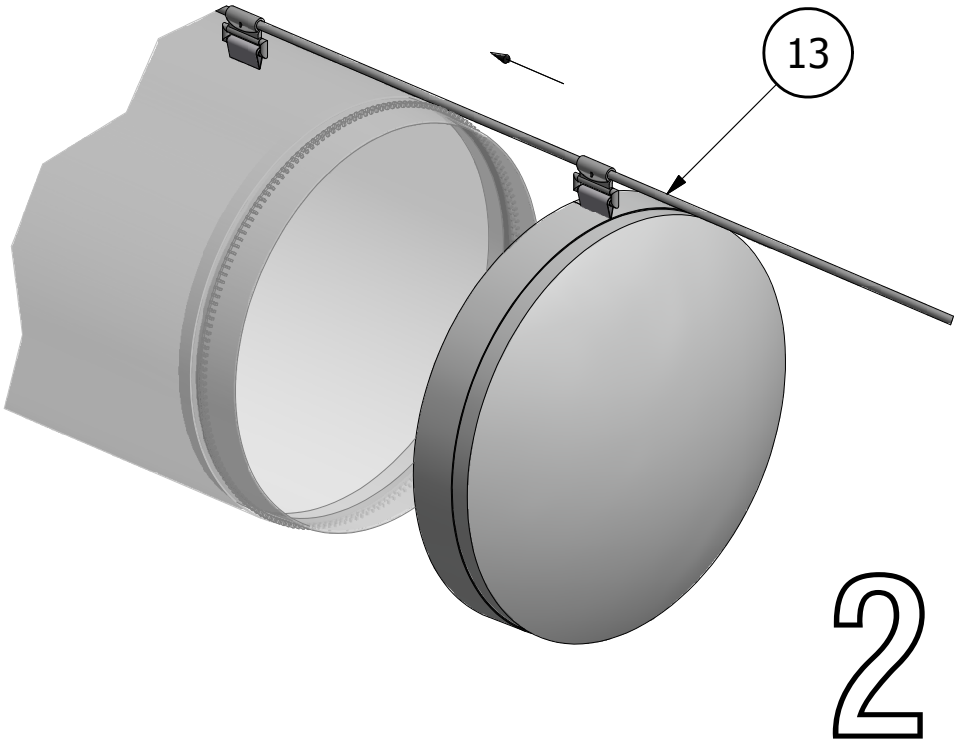

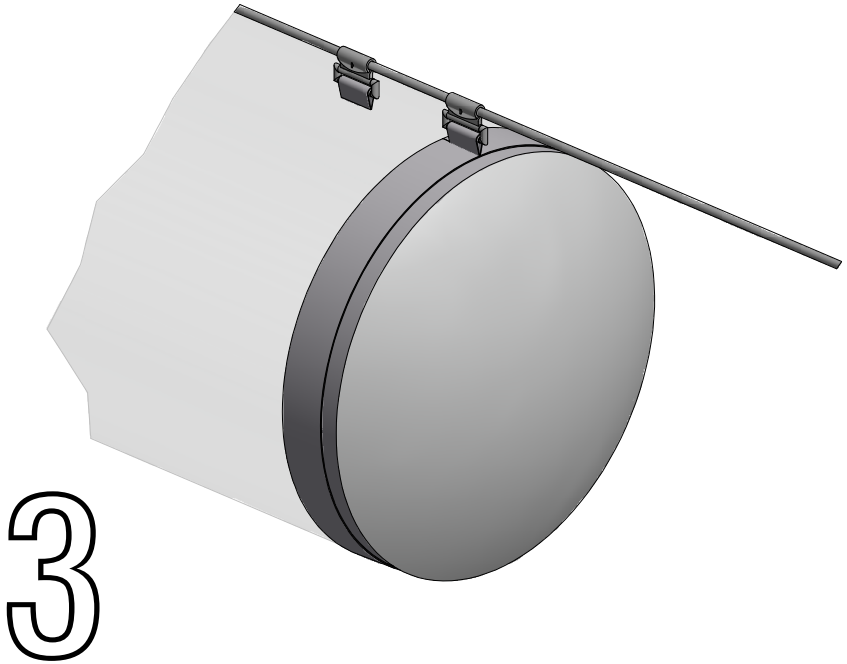

01.07

Type 1
FabricAir® Installation Drawing
2003-0107-000 (2014-FEB)

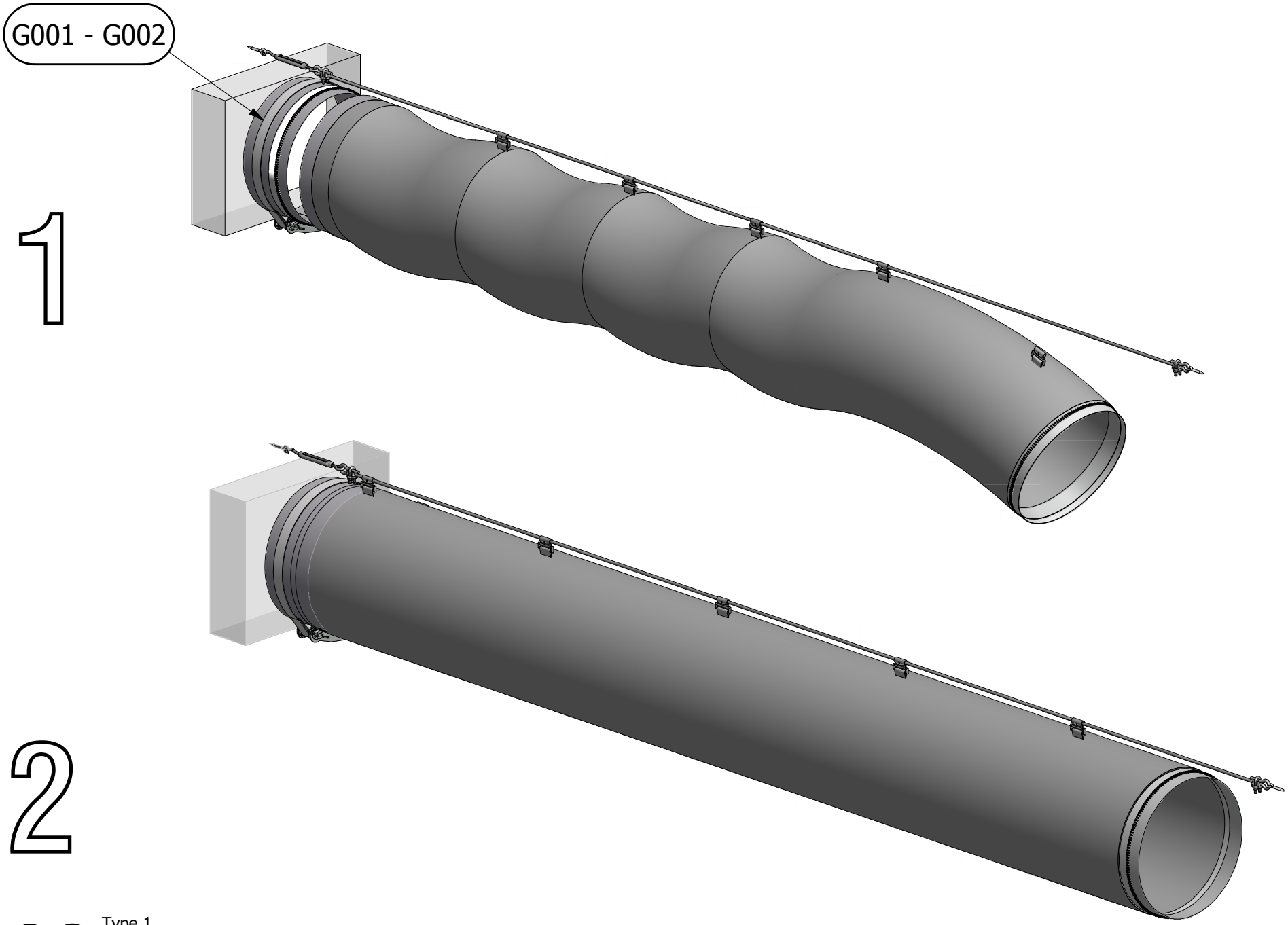

01.08

Type 1
FabricAir® Installation Drawing
2003-0108-000 (2014-FEB)

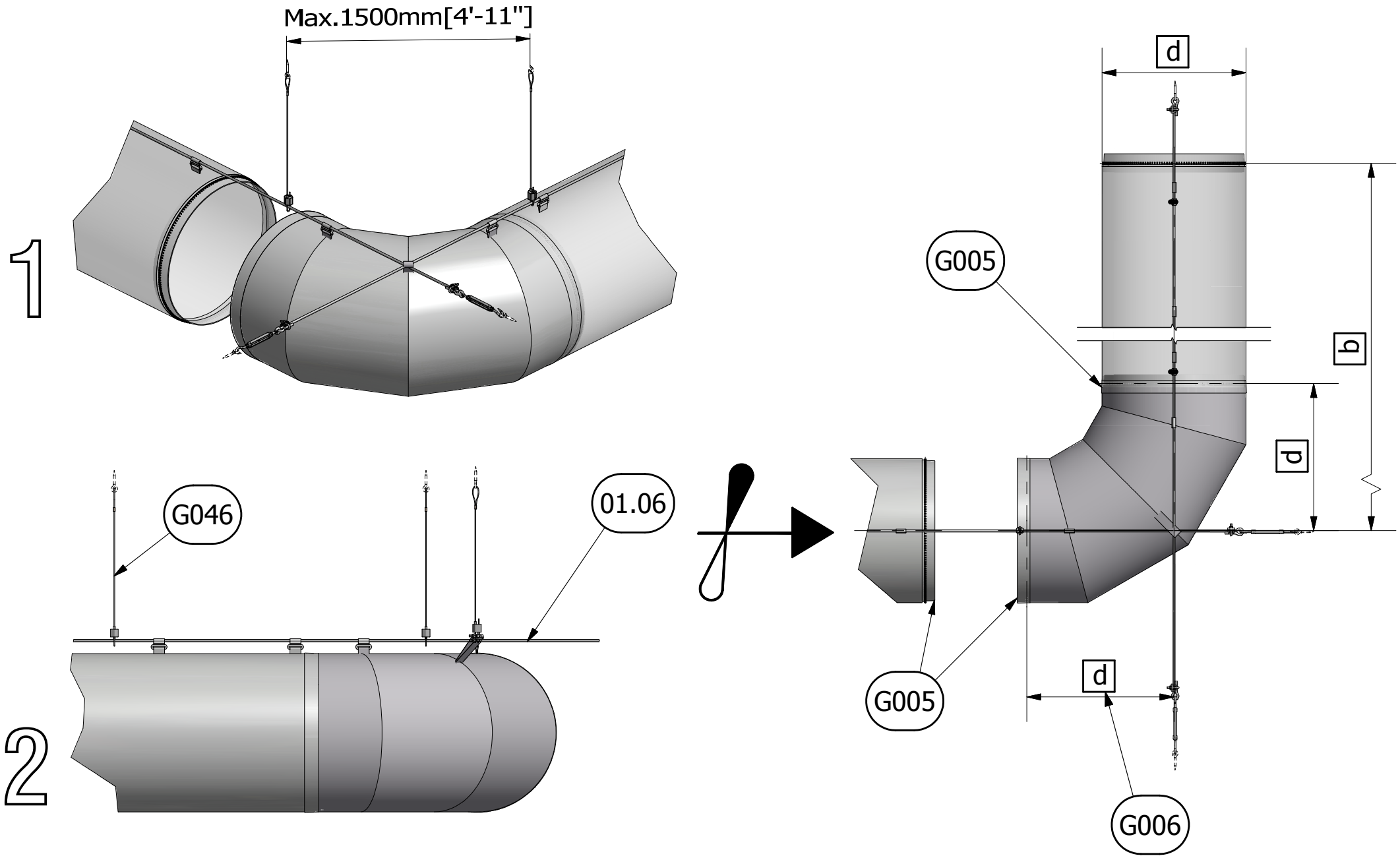

01.09

Type 1
FabricAir® Installation Drawing
2003-0109-000 (2020-JUL)

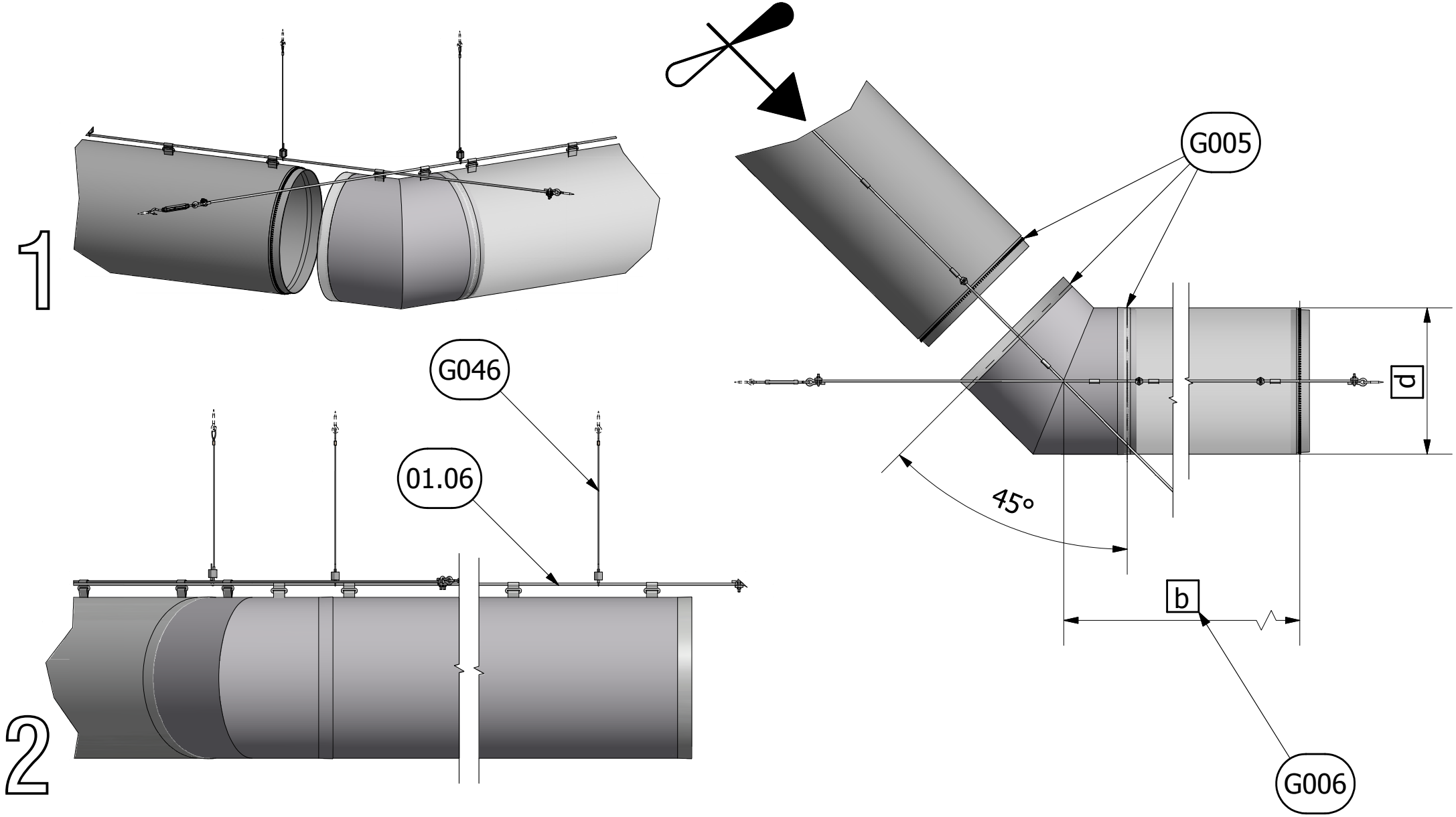

01.10

Type 1

FabricAir® Installation Drawing

2003-0110-000 (2020-JUL)

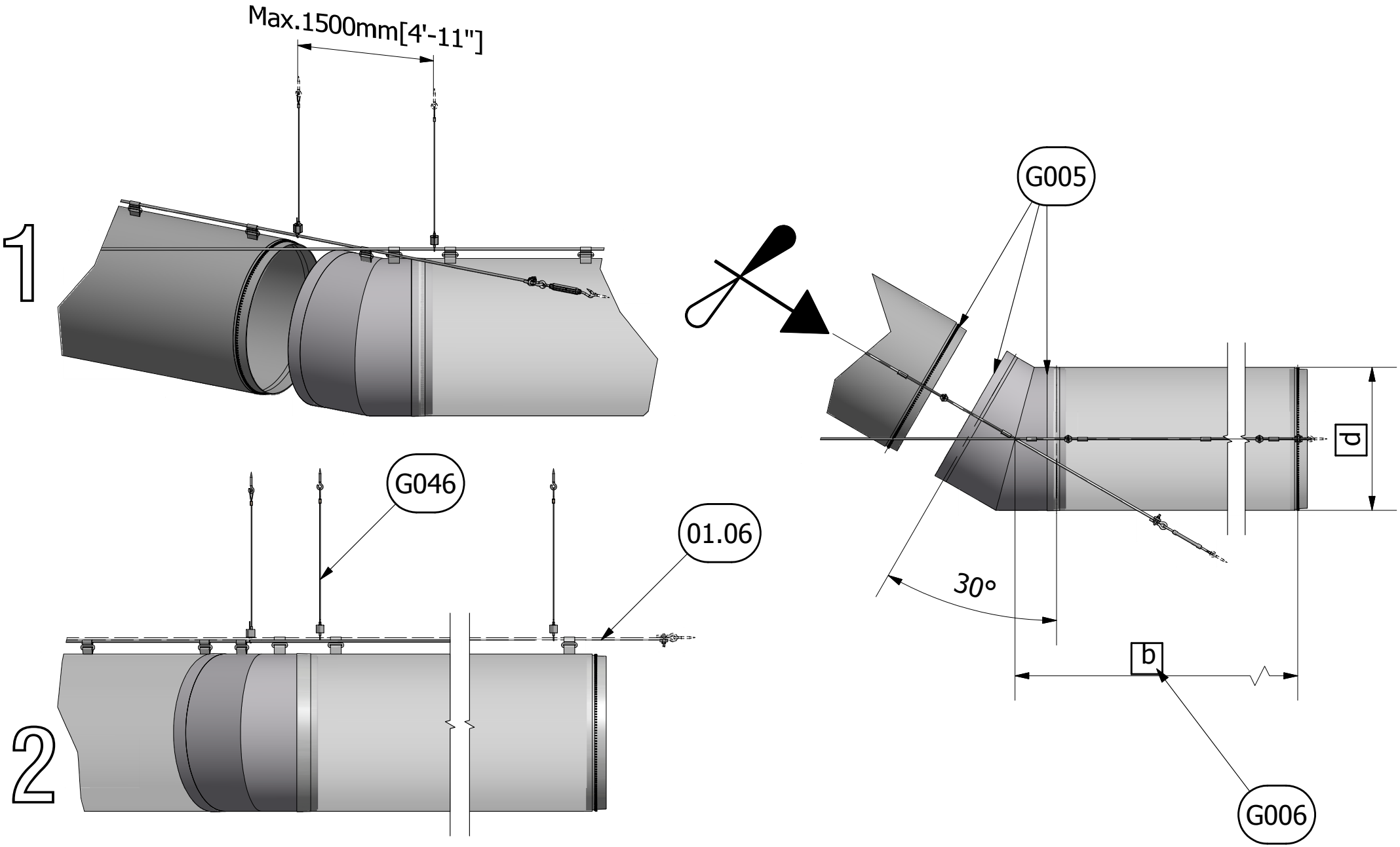

01.11

Type 1
FabricAir® Installation Drawing
2003-0111-000 (2020-JUL)

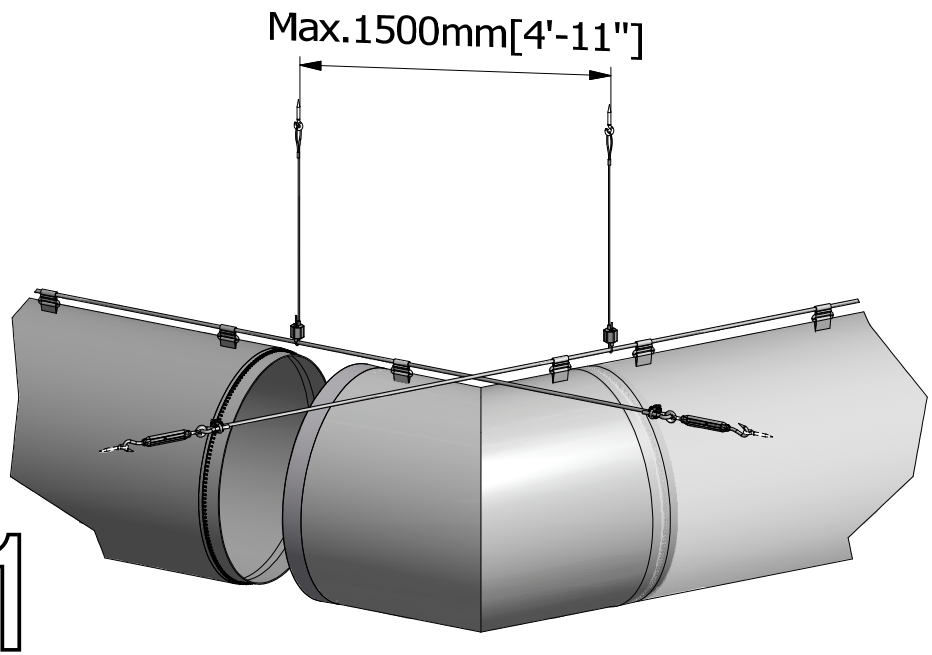

1

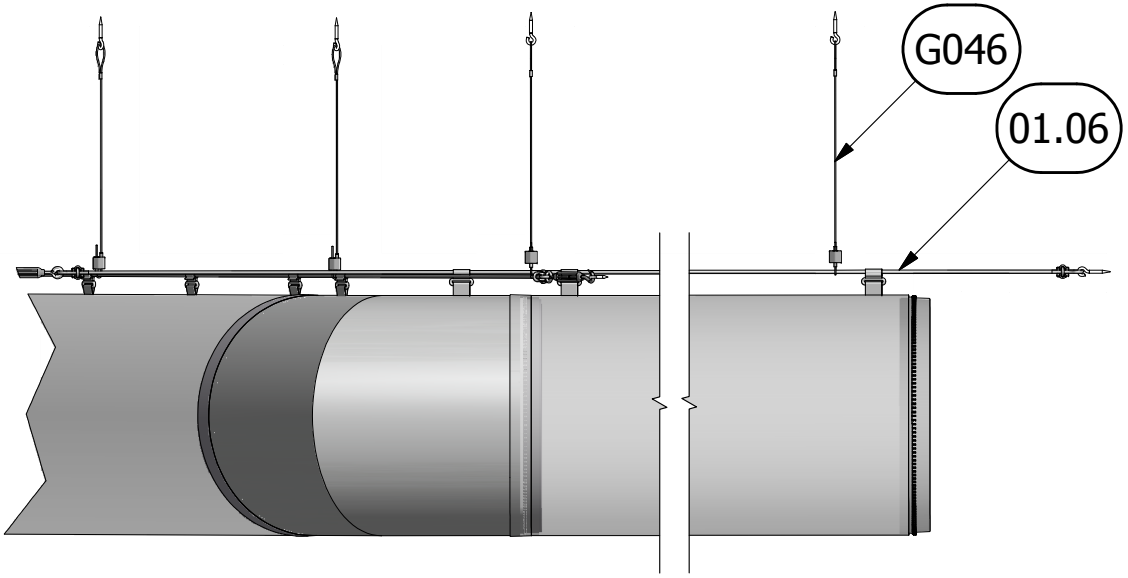

2

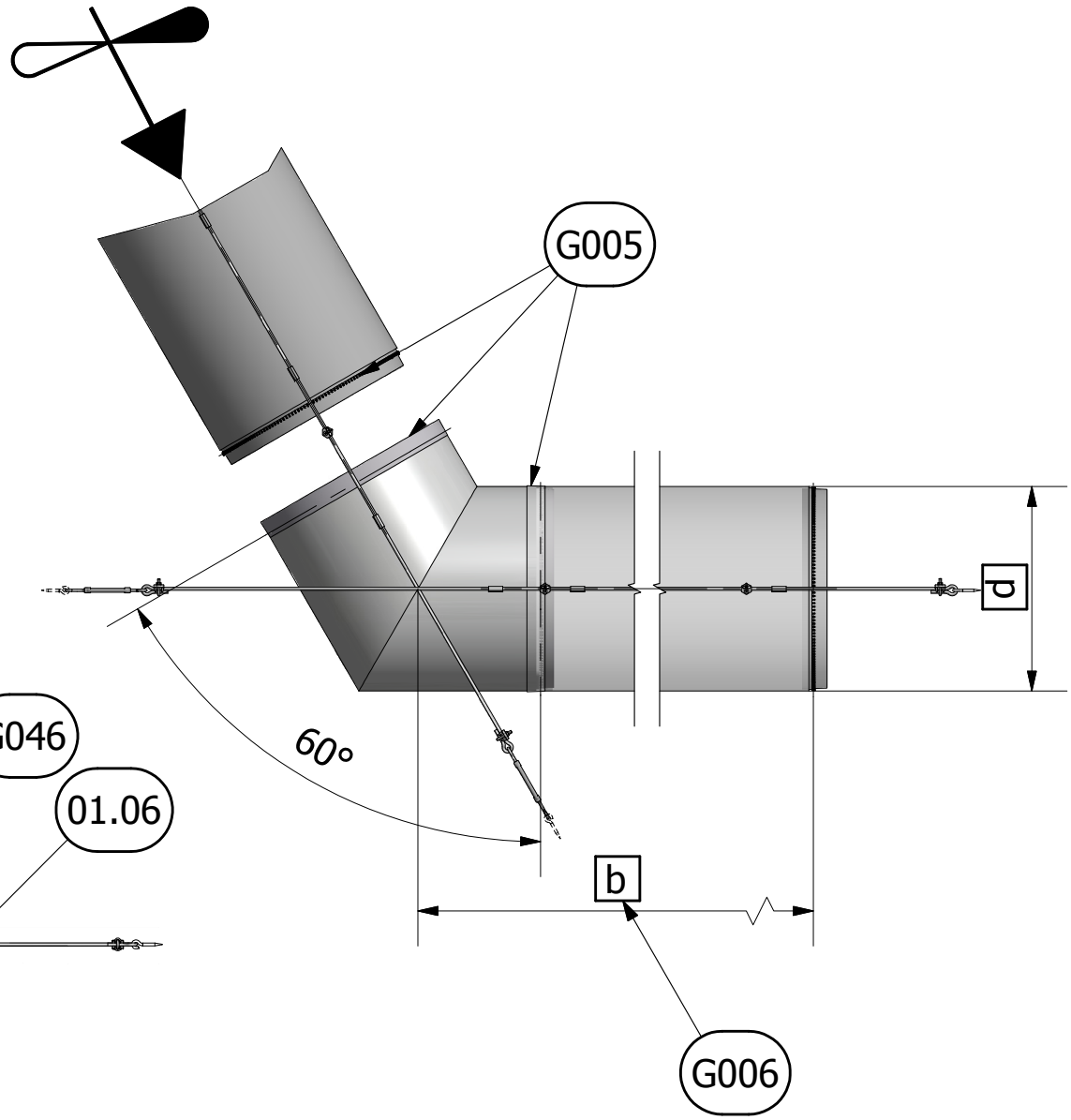

01.12

Type 1

FabricAir® Installation Drawing

2003-0112-000 (2020-JUL)

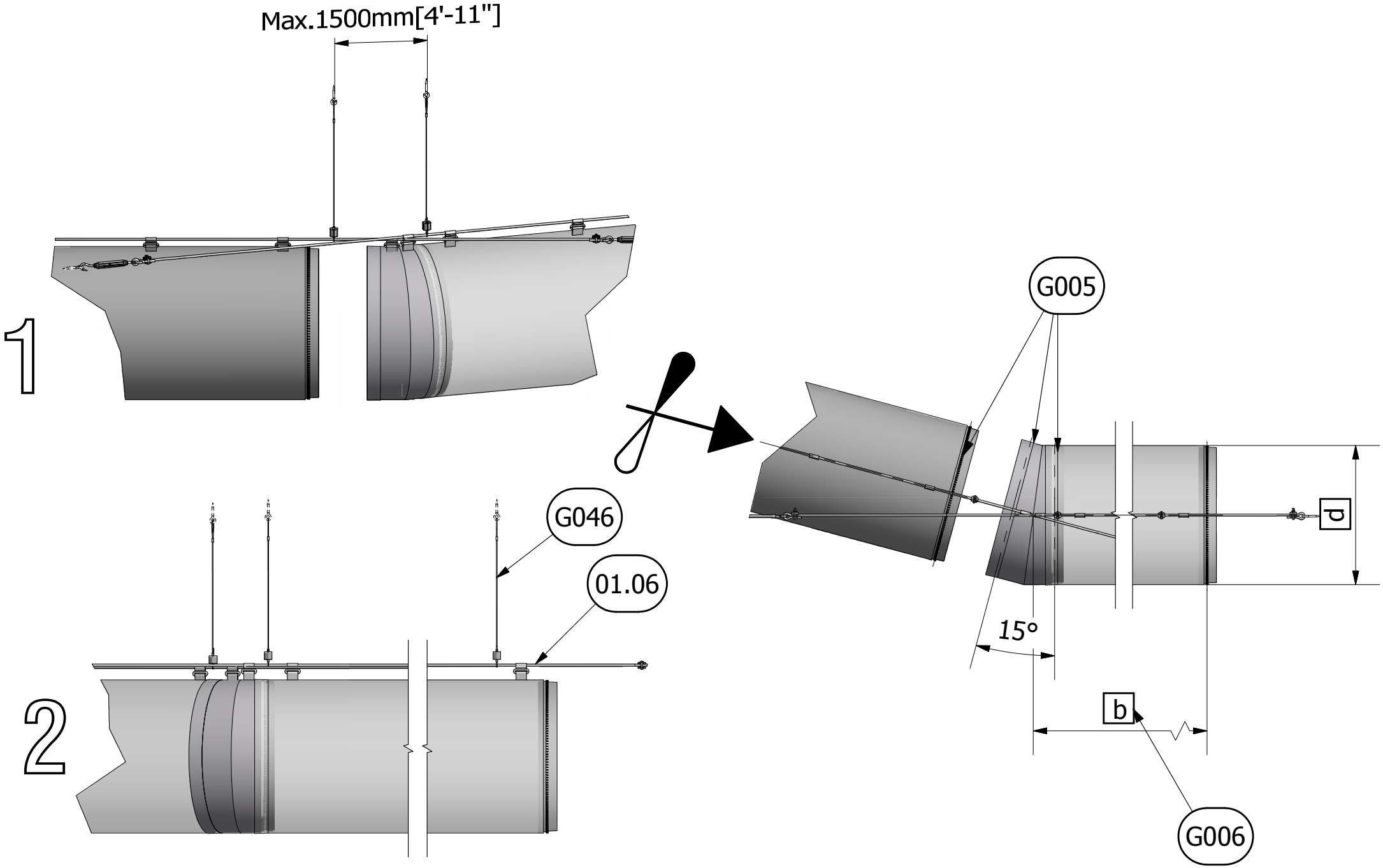

01.13

Type 1
FabricAir® Installation Drawing
2003-0113-000 (2020-JUL)

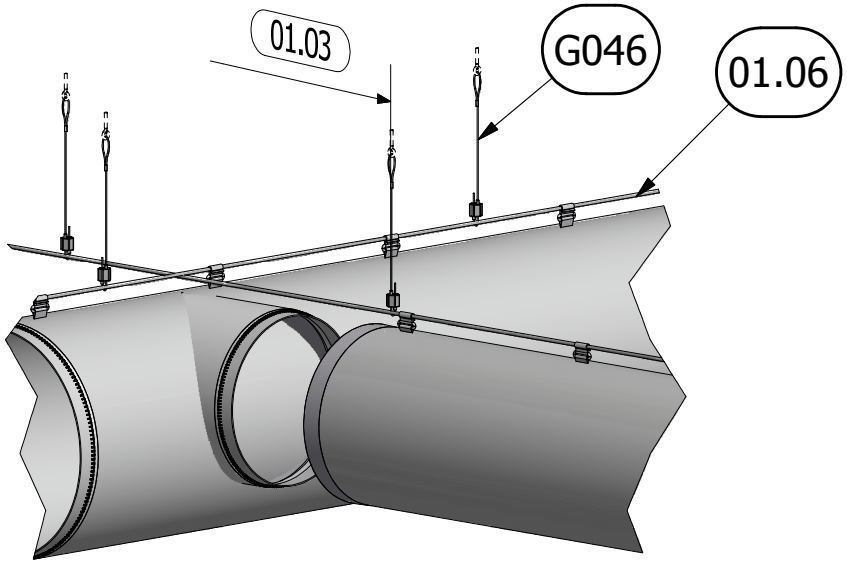

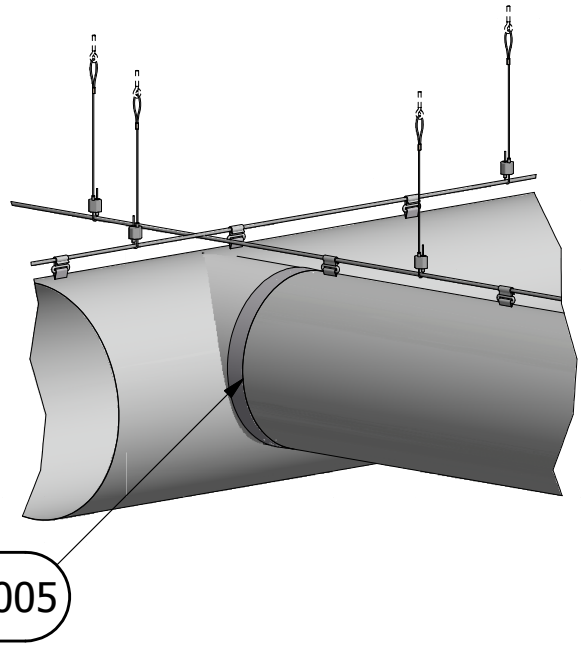

1

2

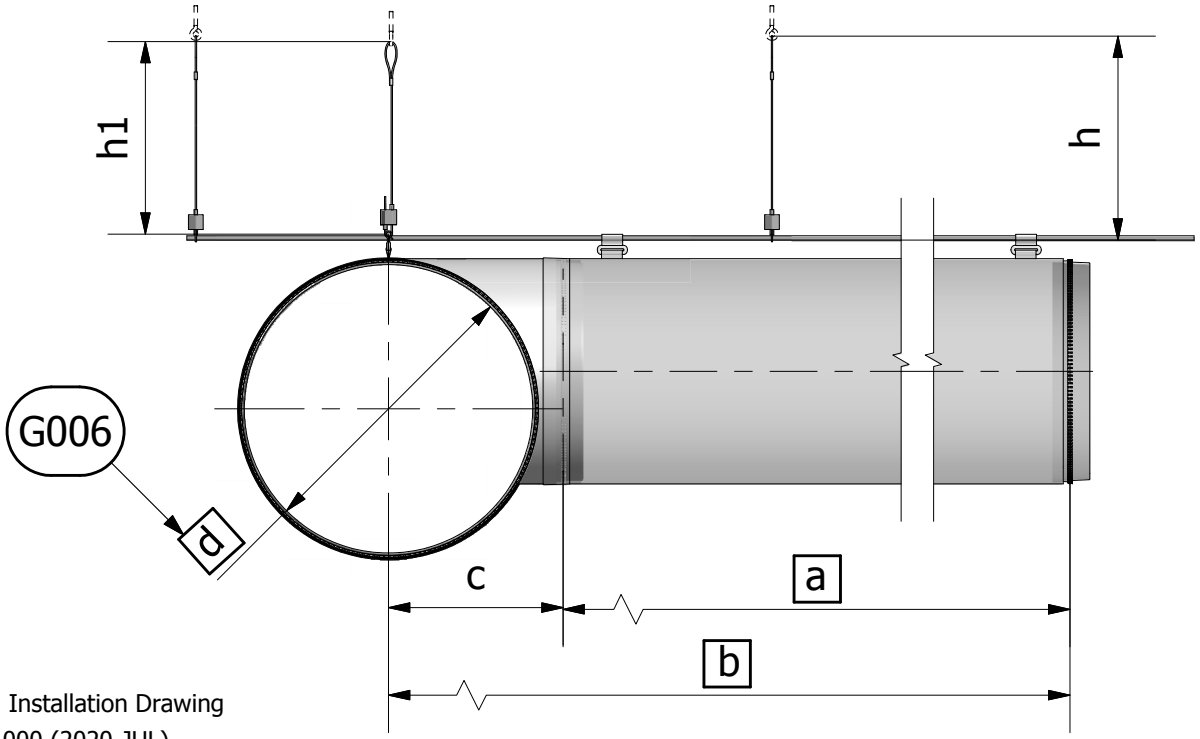

$c = \frac{1}{2} d + 35$ mm [1.38"]

$a = b - c$

$h = h1 + 10$mm [0.4"]

01.14

Type 1
FabricAir® Installation Drawing
2003-0114-000 (2020-JUL)

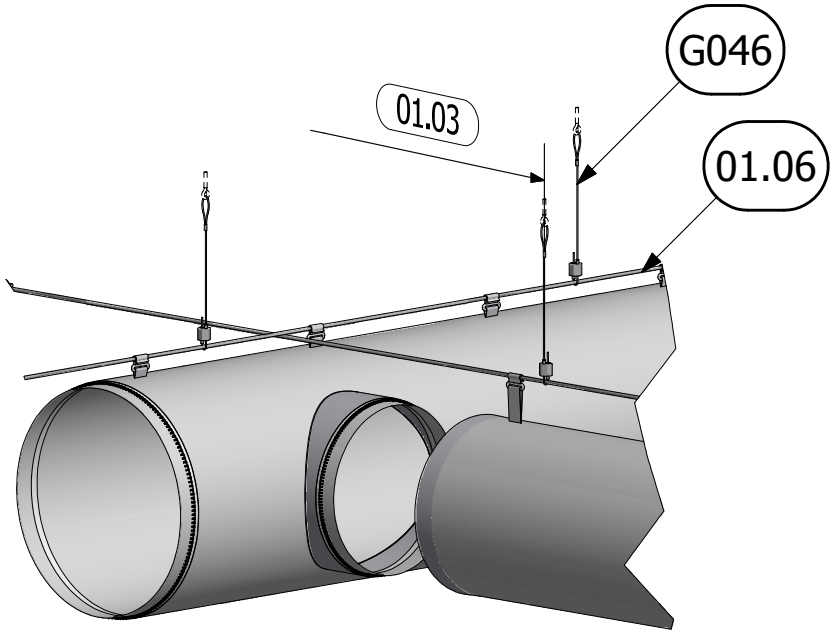

1

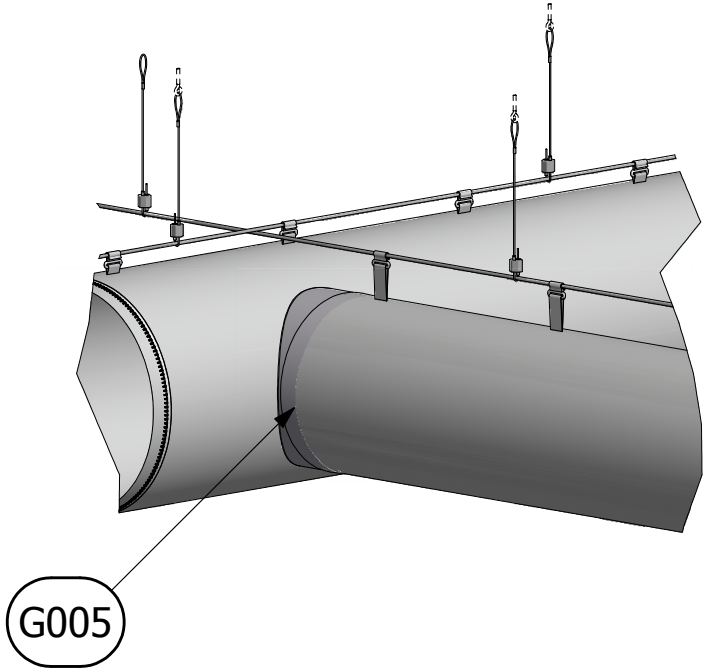

2

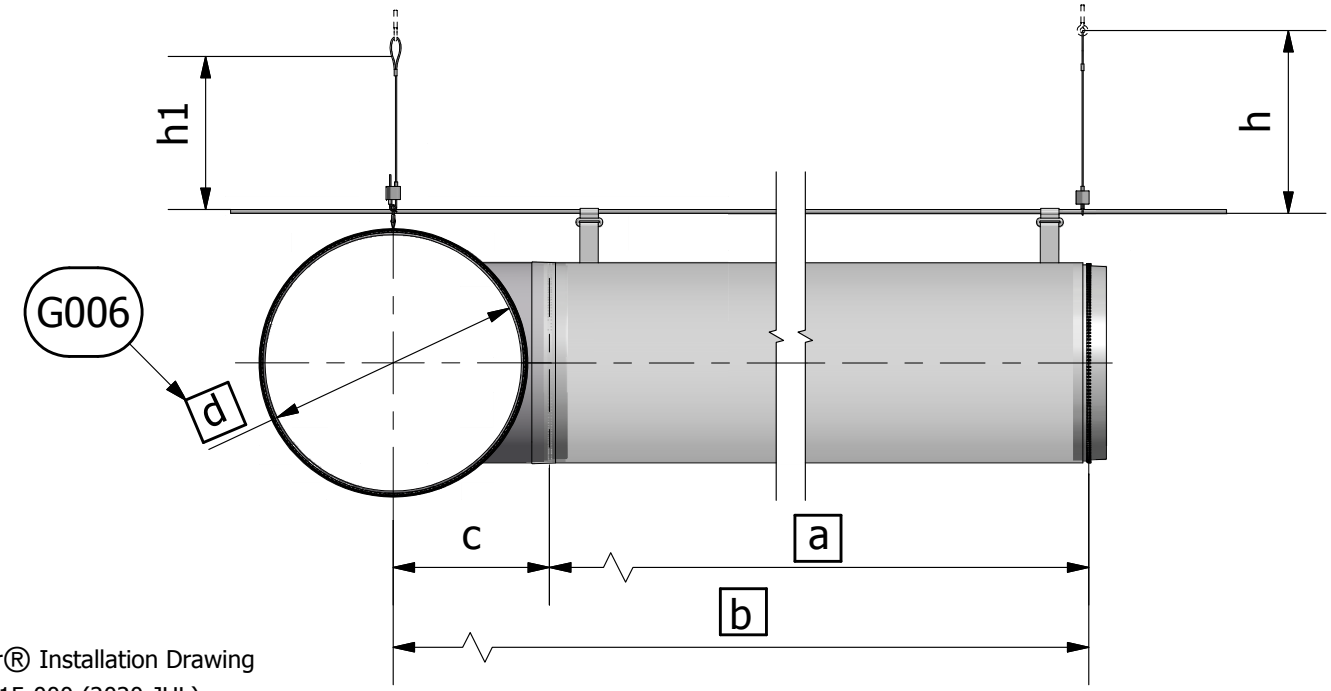

h = h1 + 10 mm[0.4"]

c = ½ d + 35 mm [1.38"]

a = b - c

01.15

Type 1
FabricAir® Installation Drawing
2003-0115-000 (2020-JUL)

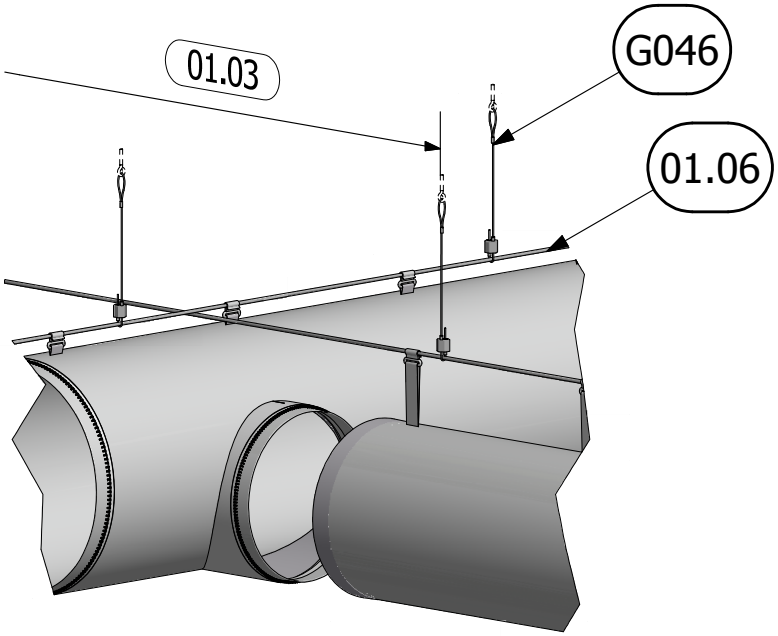

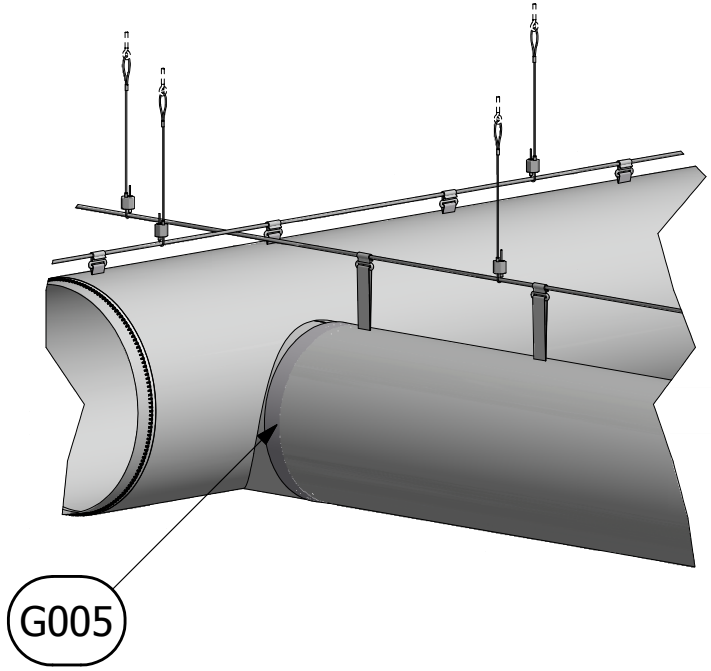

1

2

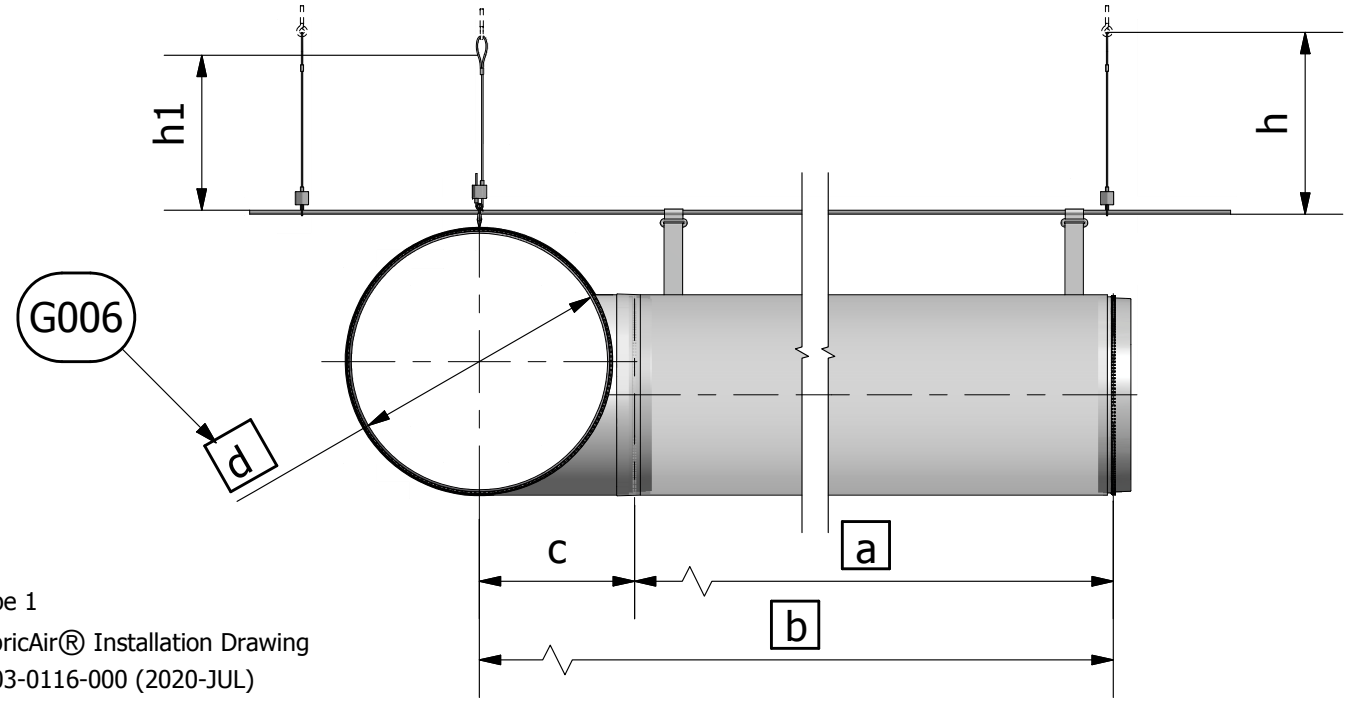

$c = \frac{1}{2} d + 35$ mm [1.38"]

$a = b - c$

$h = h1 + 10$ mm [0.4"]

01.16

Type 1
FabricAir® Installation Drawing
2003-0116-000 (2020-JUL)

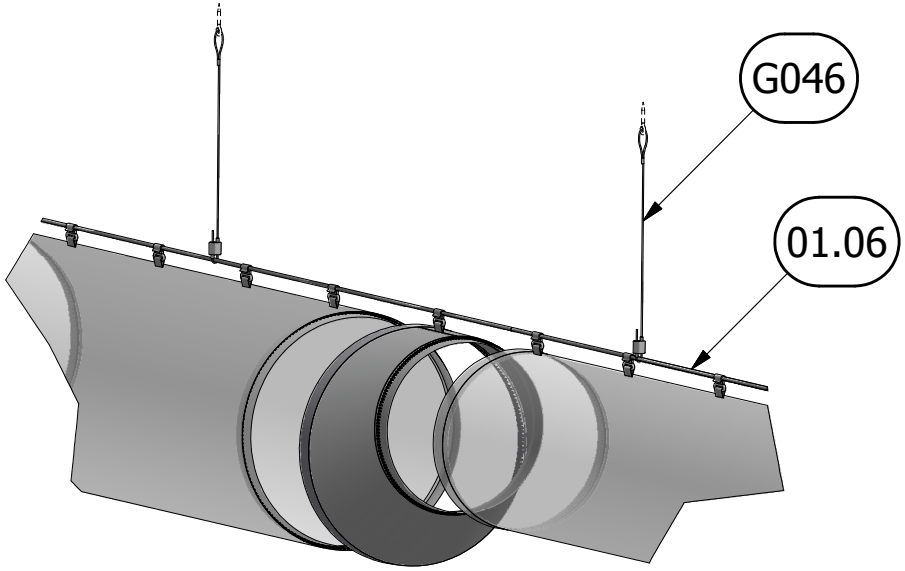

1

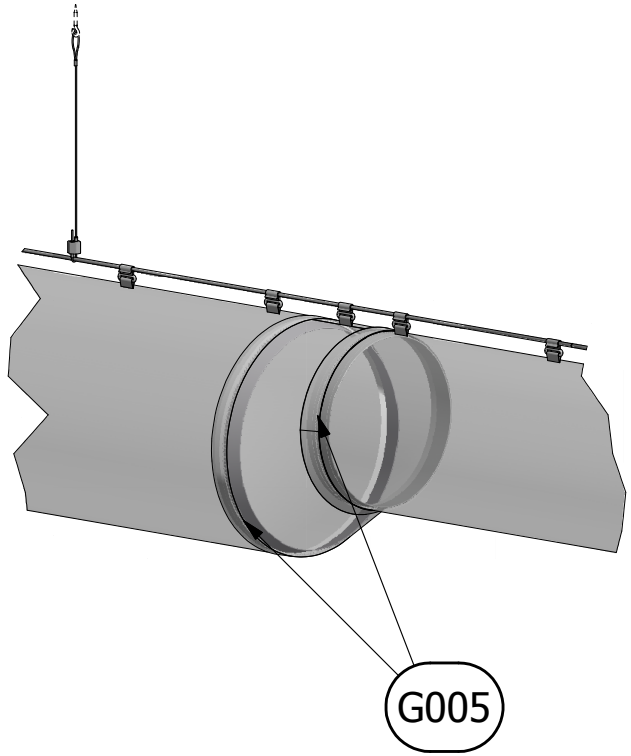

2

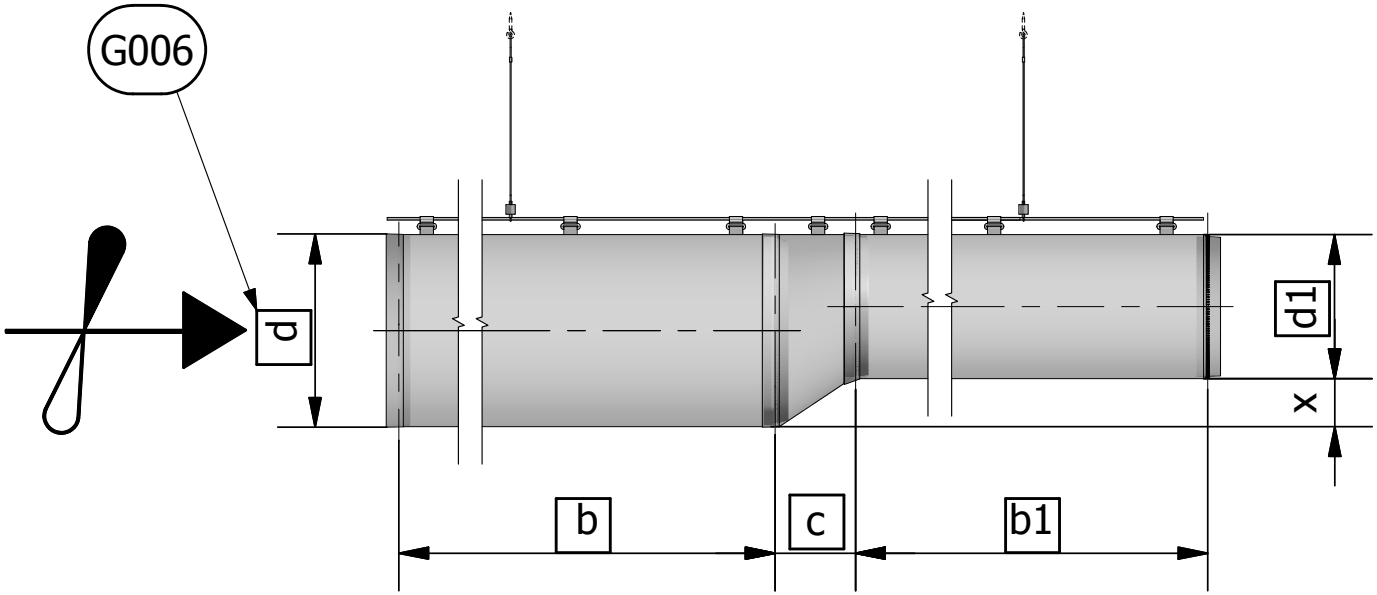

x = d - d1

01.17

Type 1
FabricAir® Installation Drawing
2003-0117-000 (2020-JUL)

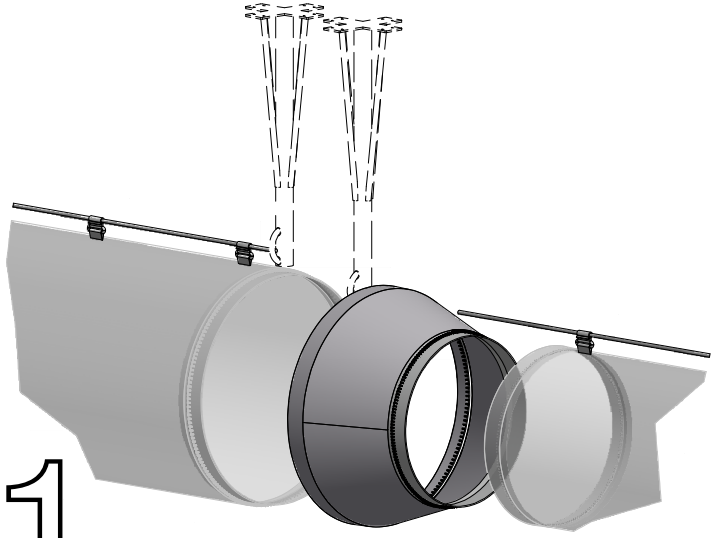

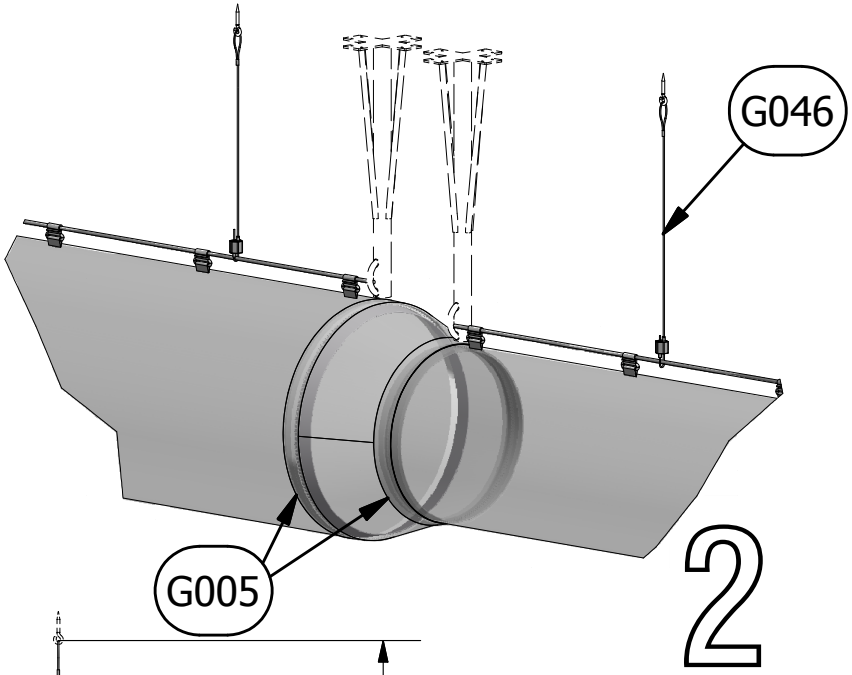

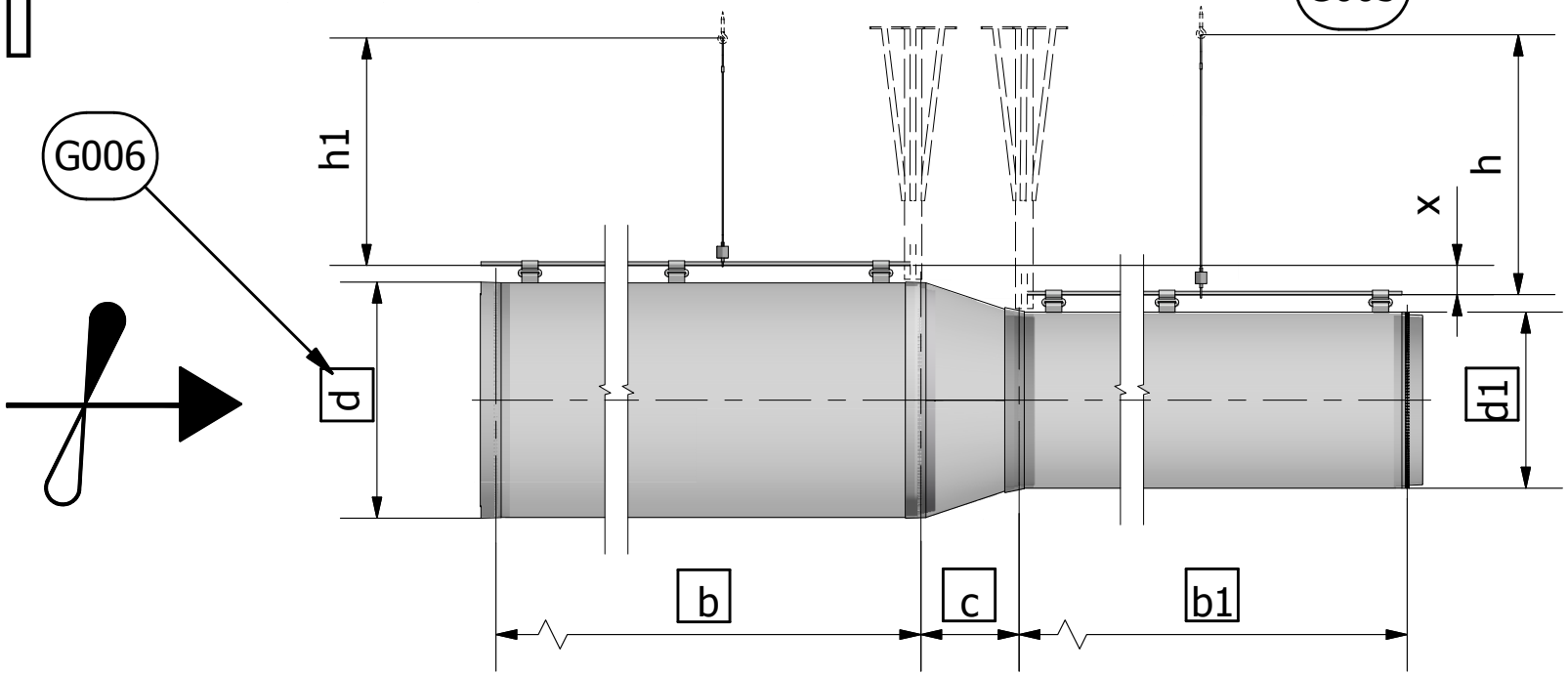

$h = h1 + x$

$x = \frac{1}{2} d - \frac{1}{2} d1$

01.18

Type 1
FabricAir® Installation Drawing
2003-0118-000 (2020-JUL)

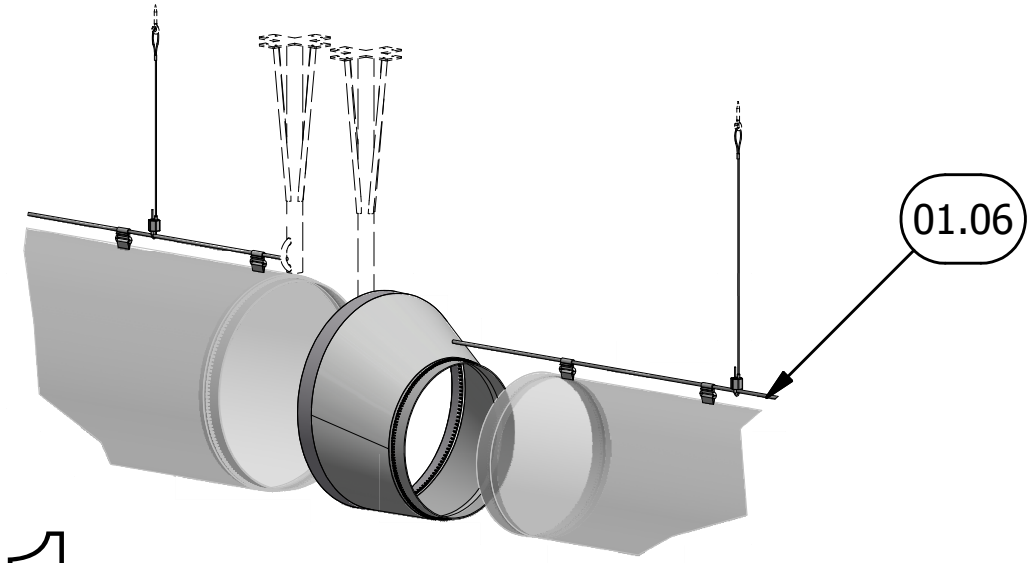

1

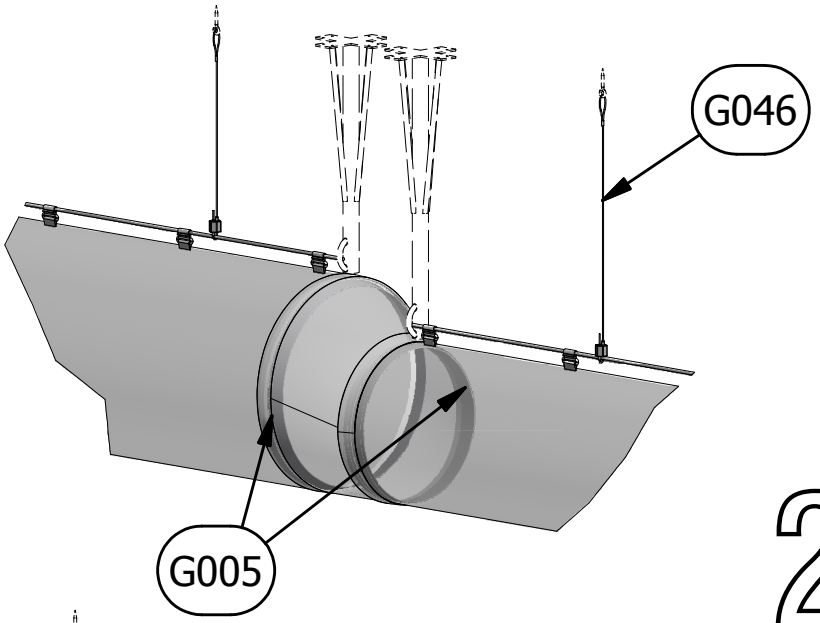

2

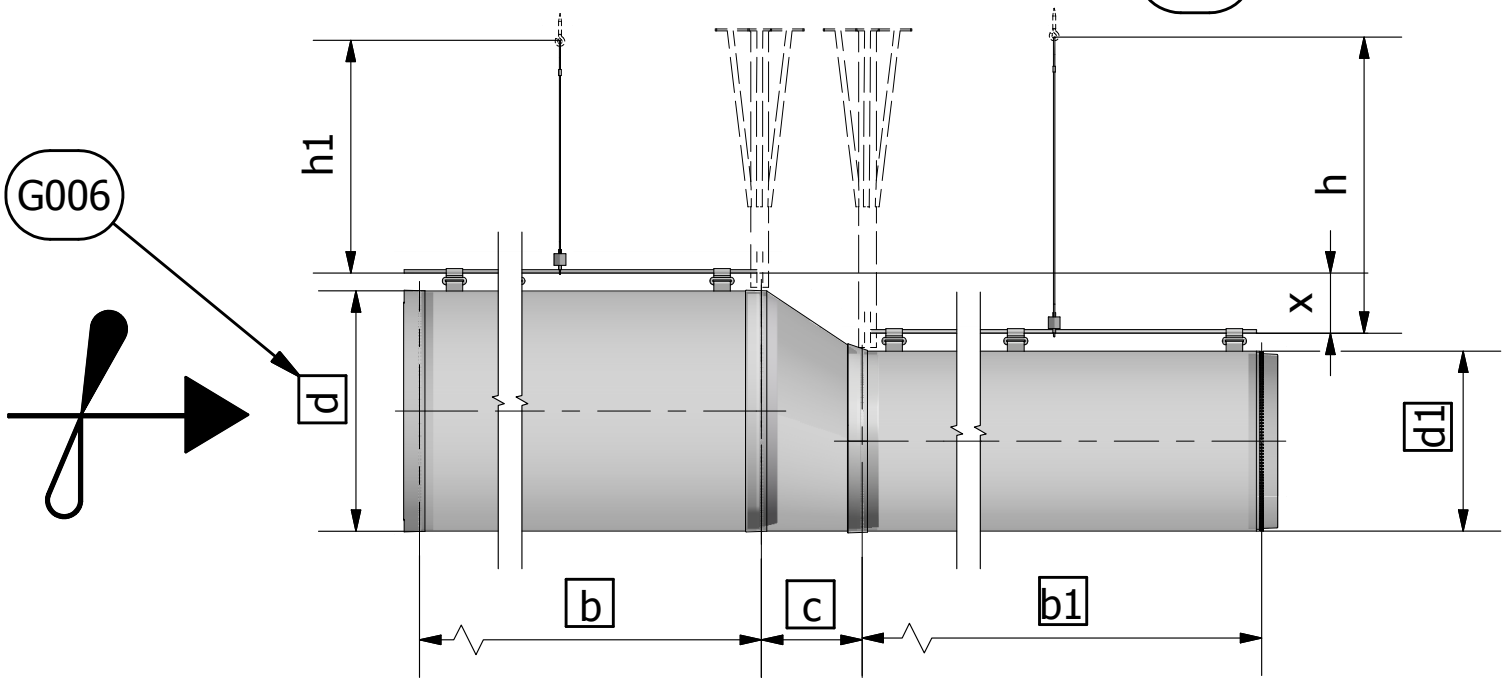

$x = (d - d1)$

$h = h1 + x$

01.19

Type 1

FabricAir® Installation Drawing

2003-0119-000 (2020-JUL)

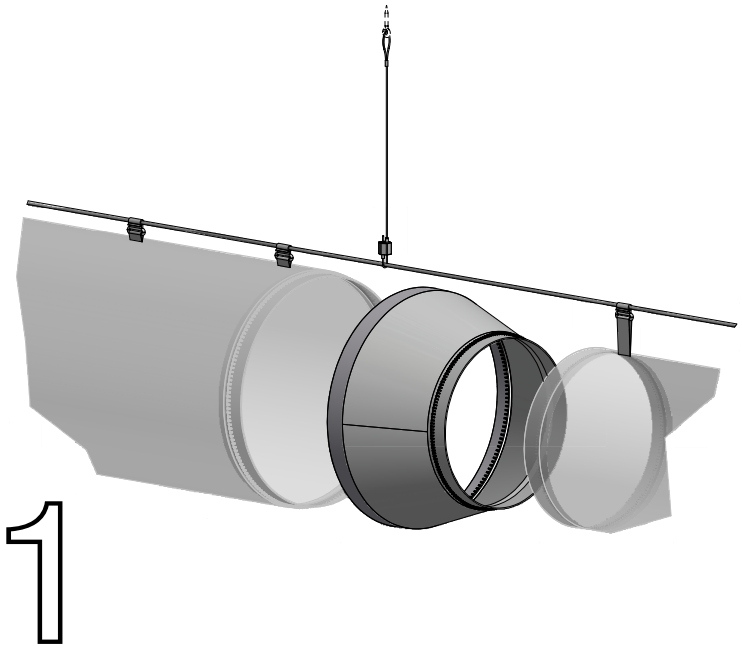

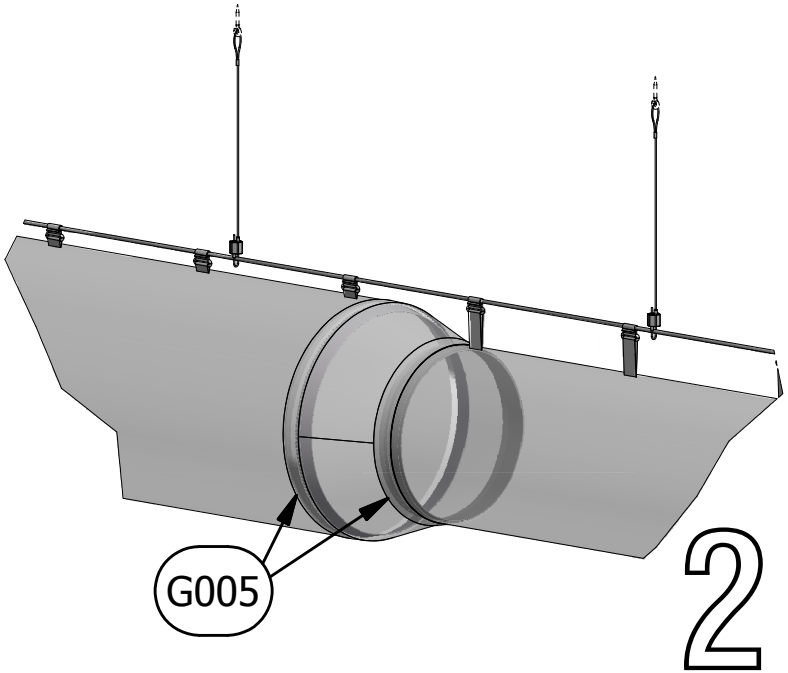

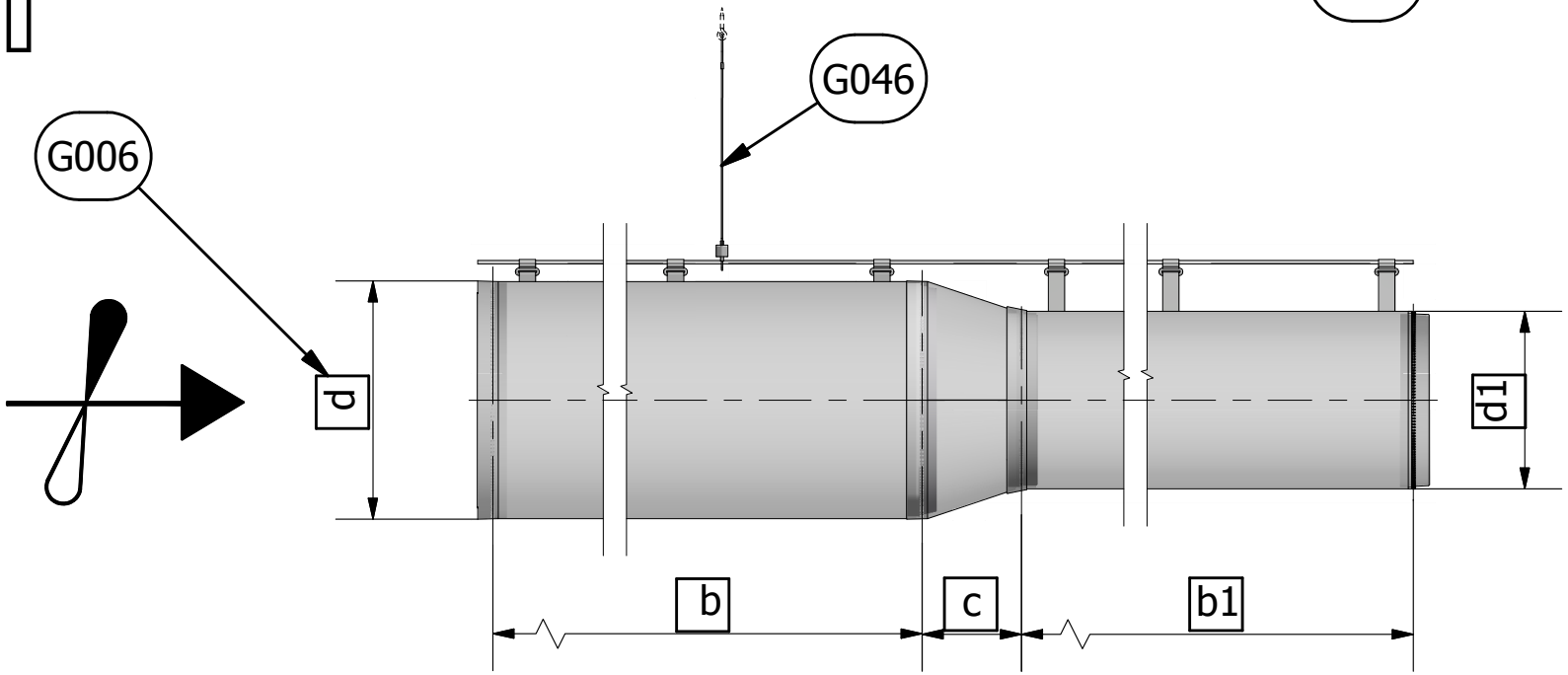

01.31

Type 1
FabricAir® Installation Drawing
2003-0131-000 (2020-JUL)

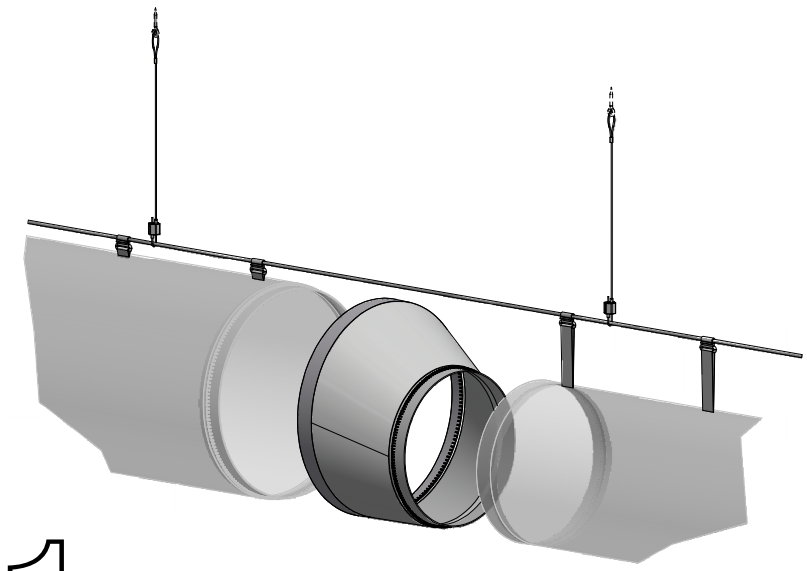

1

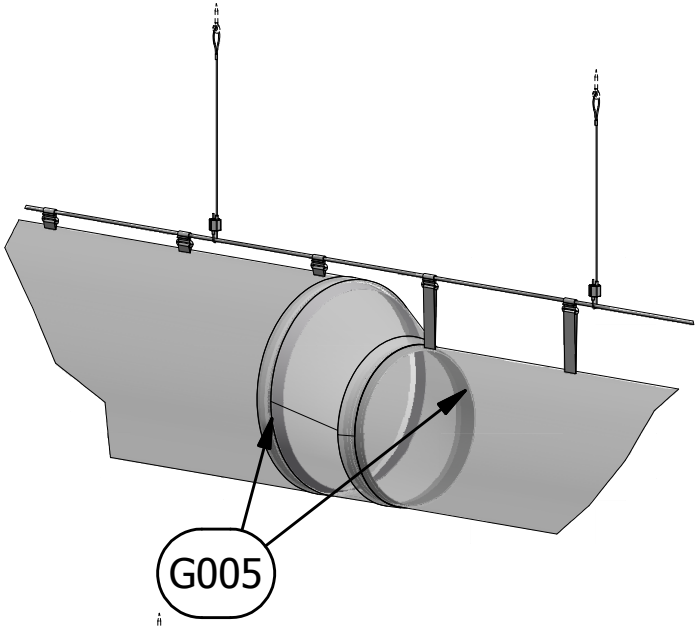

2

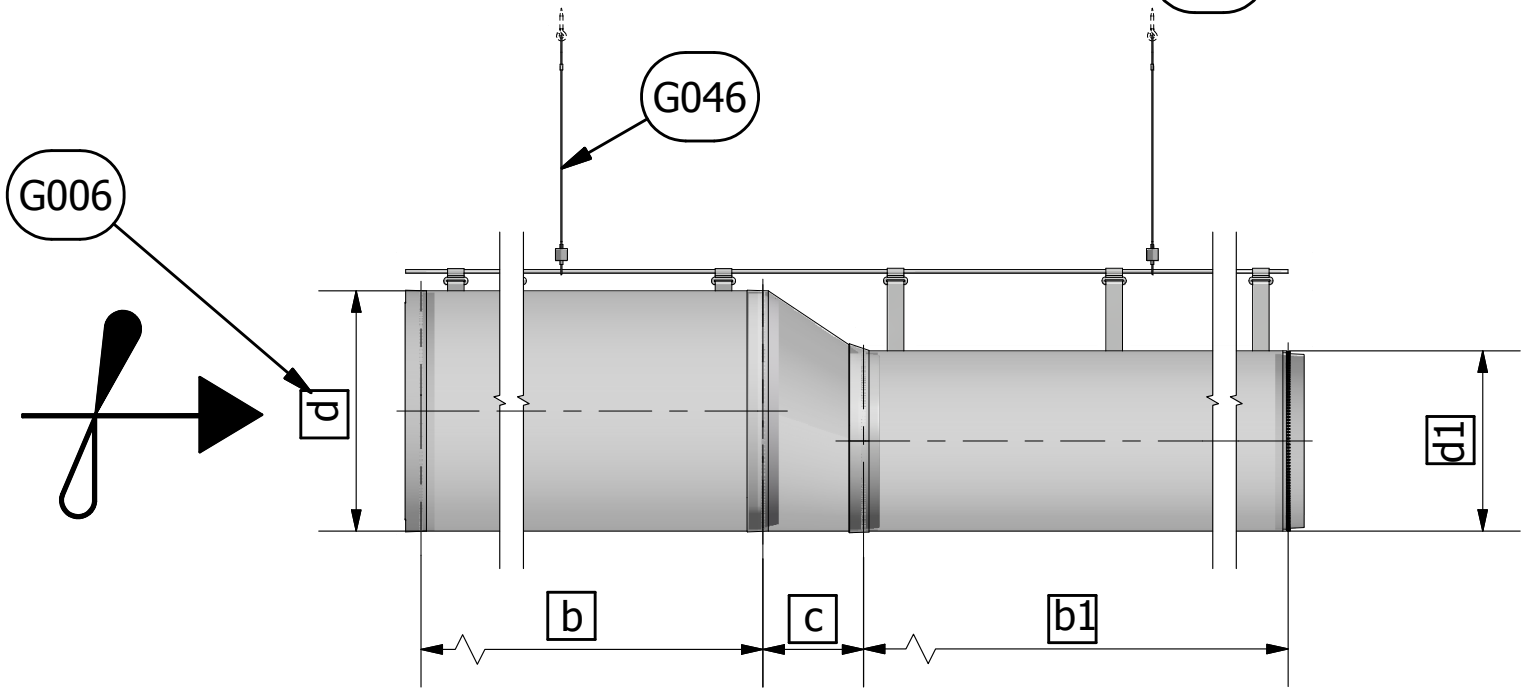

01.32

Type 1
FabricAir® Installation Drawing
2003-0132-000 (2020-JUL)

d - Duct Diam [inch]	d - Duct Diam [mm]	α - Angle [deg]	b - Chord Length [mm]	h - Drop Length[mm]
	250	180	250	141
10	255	180	255	143
	300	180	300	169
12	305	180	305	172
	315	180	315	177
14	360	180	360	203
	400	180	400	225
16	410	180	410	231
	420	180	420	236
	450	180	450	253
18	460	180	460	259
	500	180	500	281
20	510	180	510	287
22	560	180	560	315
	600	180	600	338
24	610	180	610	343
	630	180	630	354
	650	180	650	366
26	660	180	660	371
	710	180	710	399
28	715	180	715	402
	720	180	720	405
30	765	180	765	430
	800	180	800	450
32	815	180	815	458
34	865	180	865	487
	900	180	900	506
36	915	180	915	515
38	965	180	965	543
	1000	180	1000	563
40	1020	180	1020	574
42	1070	180	1070	602
	1100	180	1100	619
44	1120	180	1120	630
46	1170	180	1170	658
	1200	180	1200	675
48	1220	180	1220	686
	1250	120	1082.5	1139
	1300	120	1125.8	1185
	1400	120	1212.4	1275
	1500	120	1299	1367
	1600	90	1131.2	1746
	1700	90	1201.9	1855
	1800	60	900	2278
	1900	60	950	2404
	2000	60	1000	2533

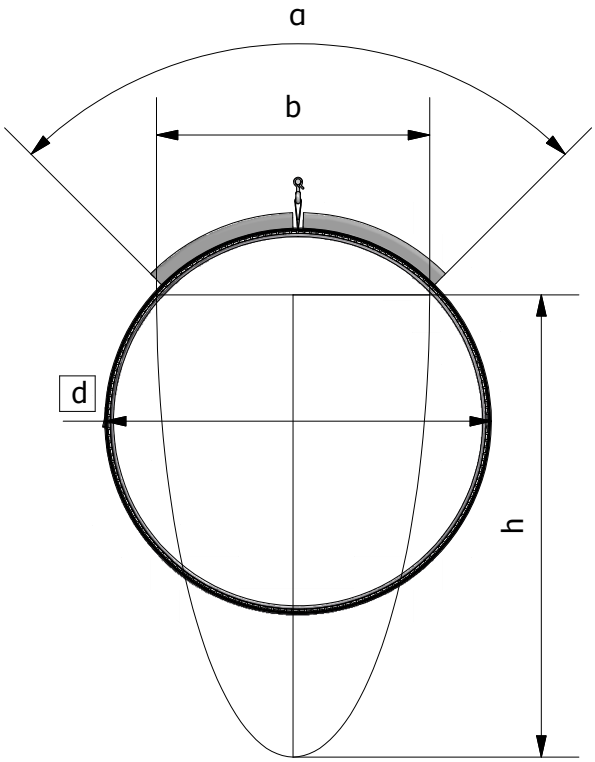

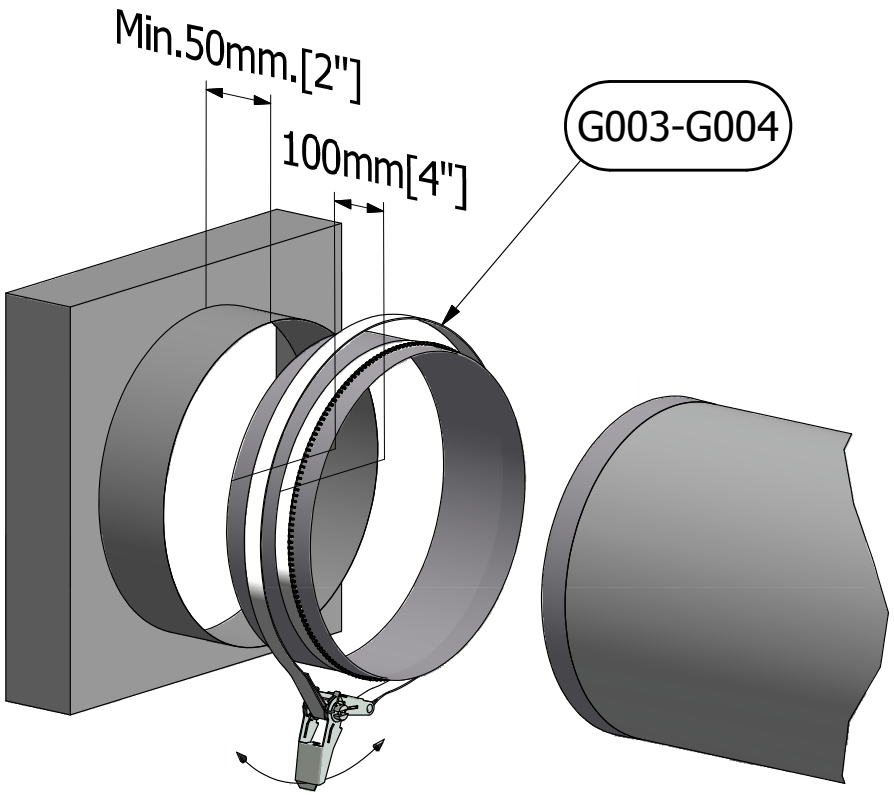

1

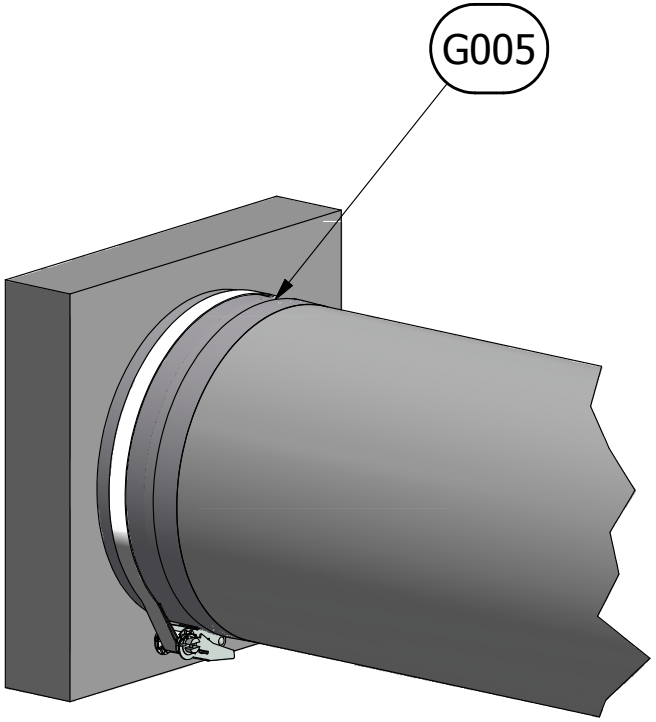

2

G001

FabricAir® Installation Drawing
2003-G001-000 (2014-FEB)

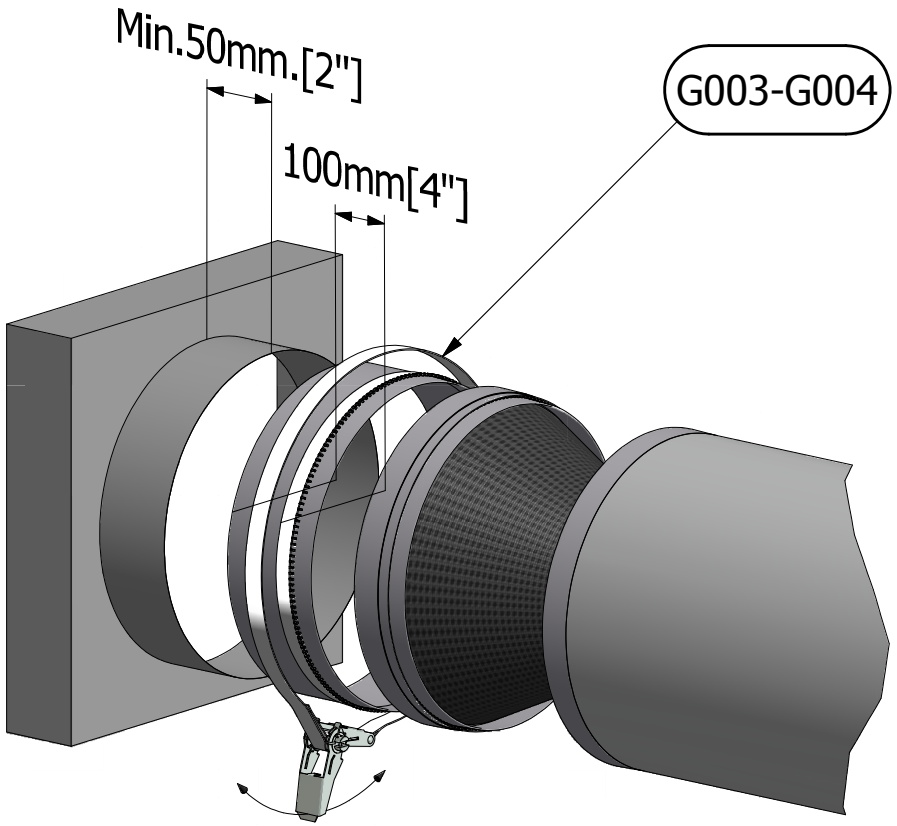

1

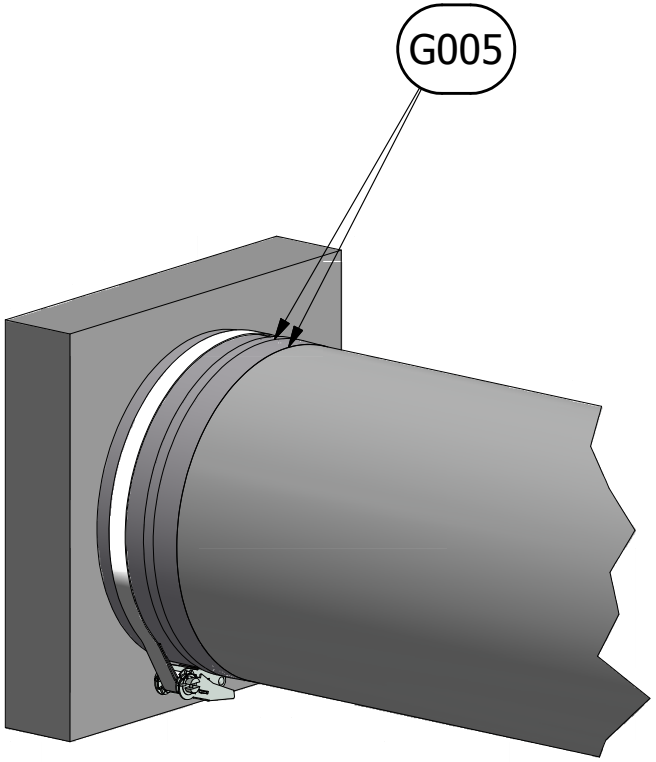

2

G002

FabricAir® Installation Drawing
2003-G002-000 (2014-FEB)

No. 17 (d < 508mm [20in])

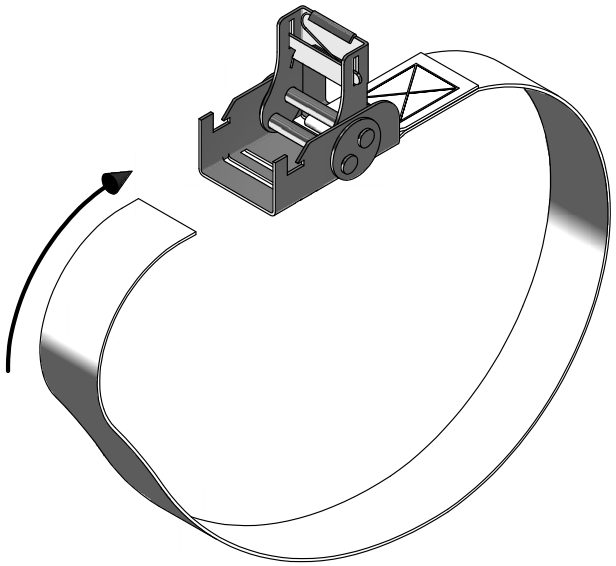

1

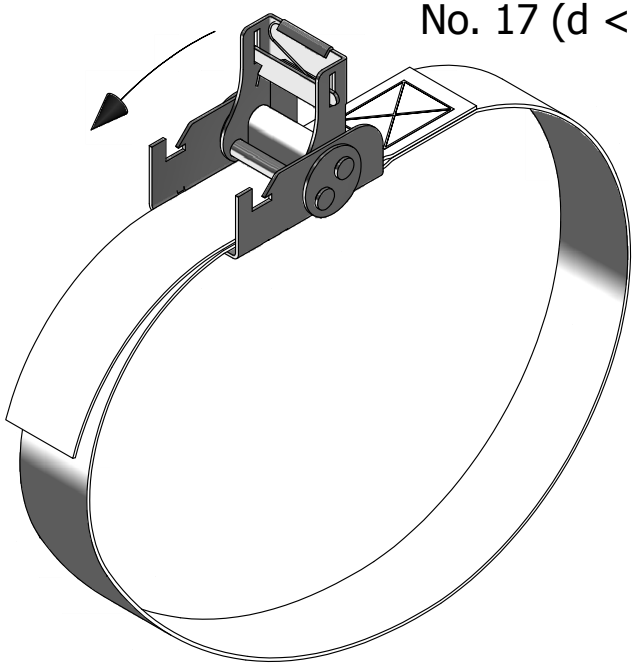

3

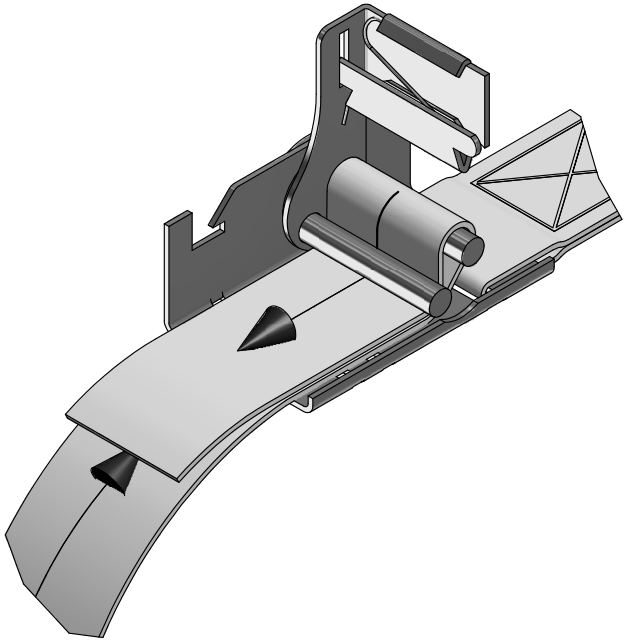

2

4

G003

FabricAir® Installation Drawing
2003-G003-000 (2014-FEB)

No. 18 (508mm [20"] < d < 2032mm[80"])

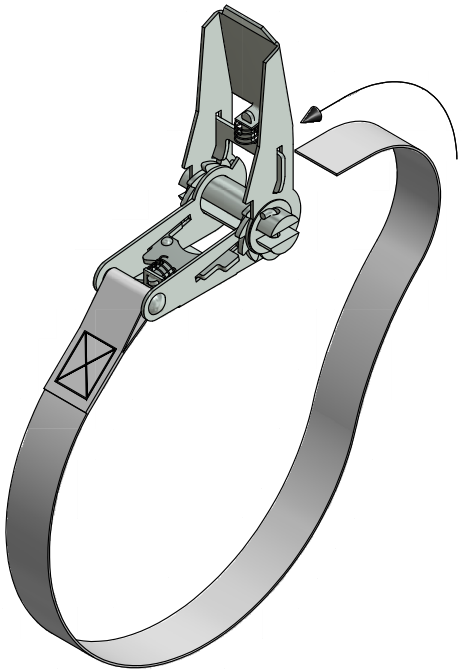

1

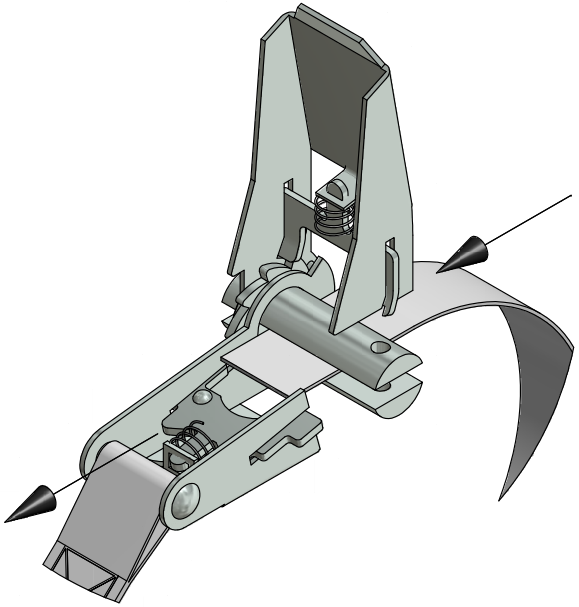

2

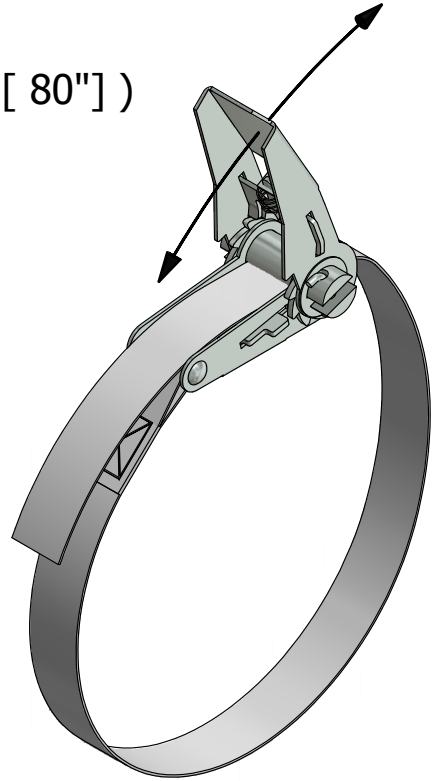

3

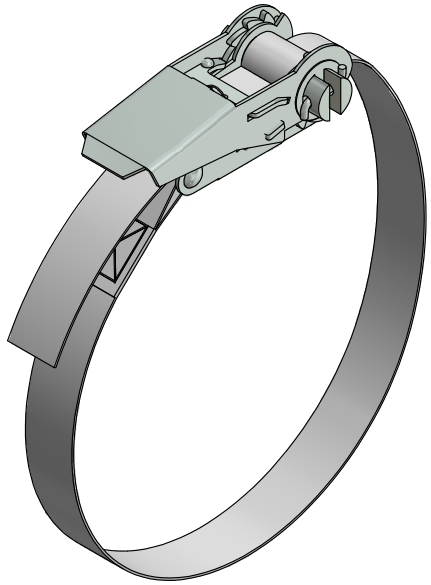

4

G004 FabricAir® Installation Drawing
2003-G004-000 (2014-FEB)

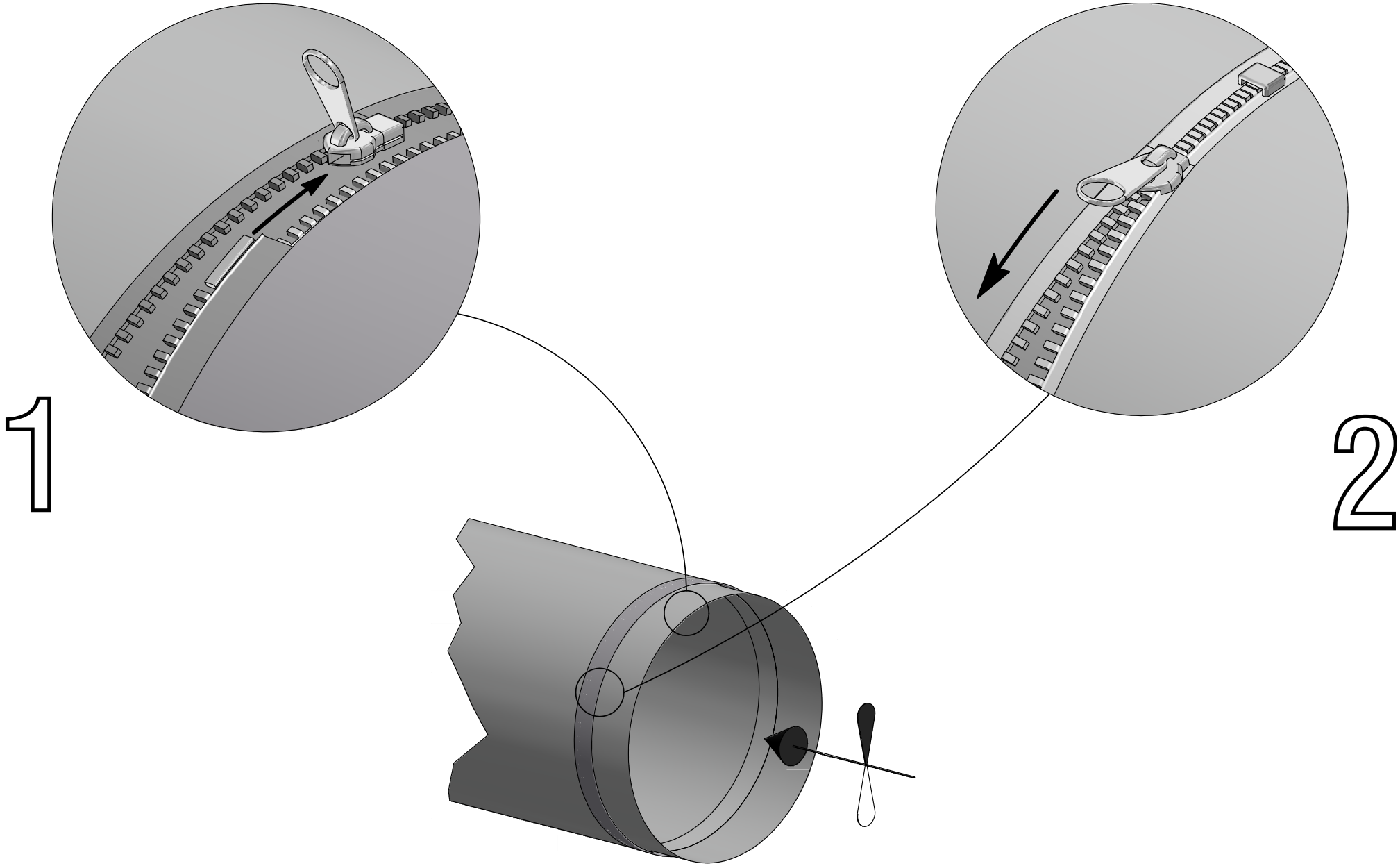

G005

FabricAir® Installation Drawing
2003-G005-000 (2014-FEB)

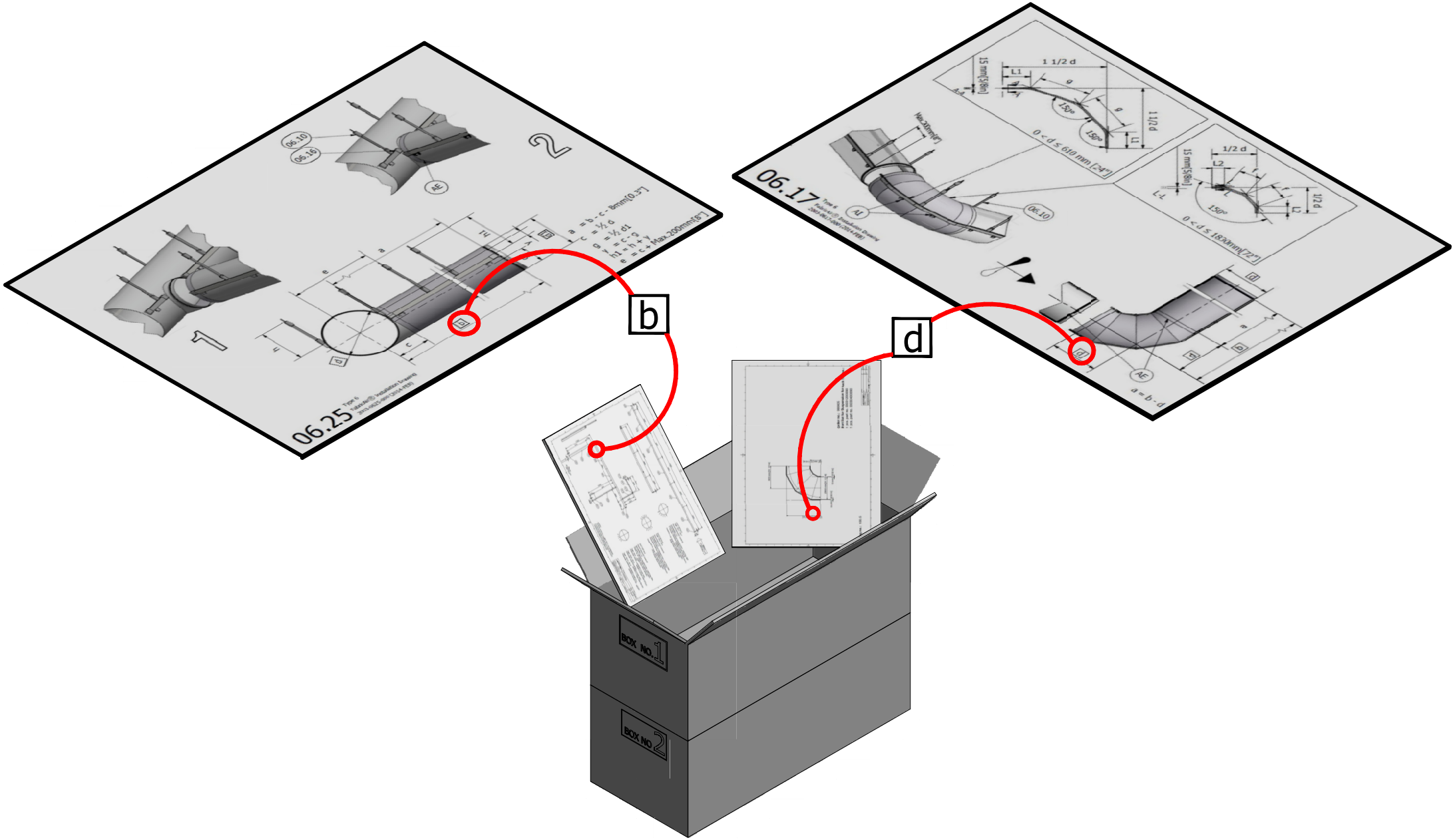

Note:
The Dimensions given in squares can be found in system drawing which is in box 1 .

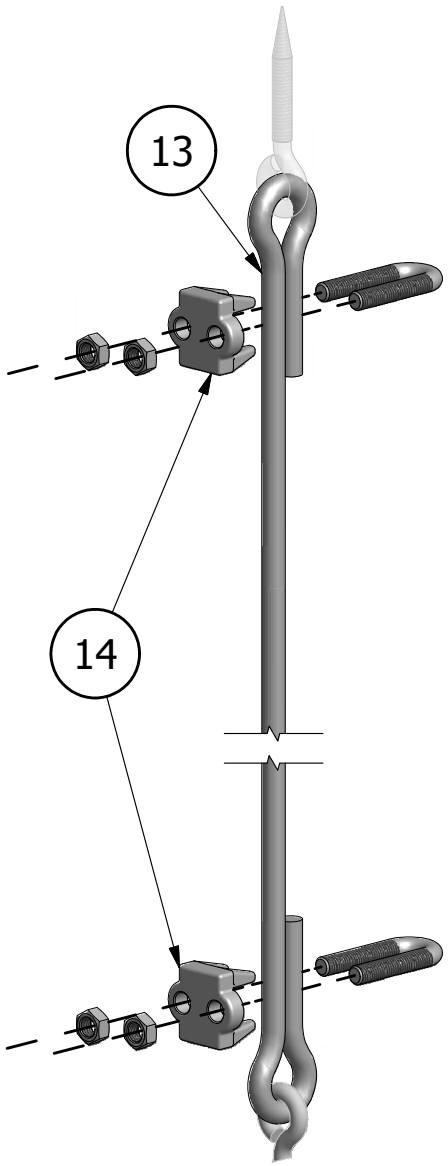

1

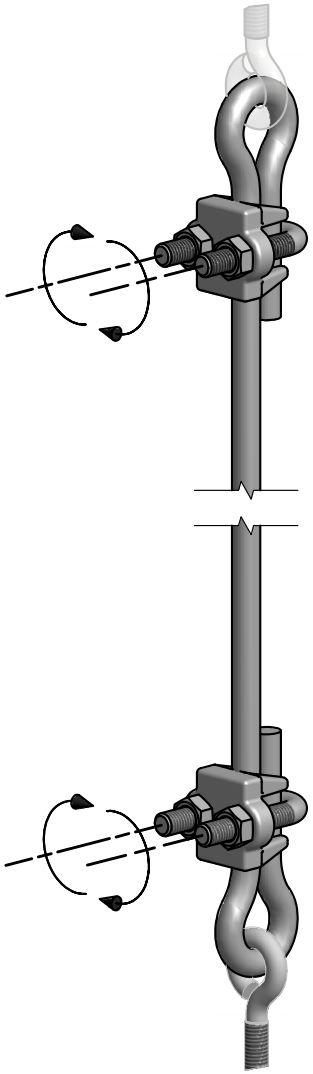

2

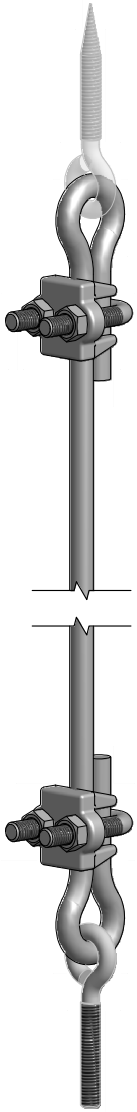

3

G007

FabricAir® Installation Drawing
2003-G007-000 (2014-FEB)

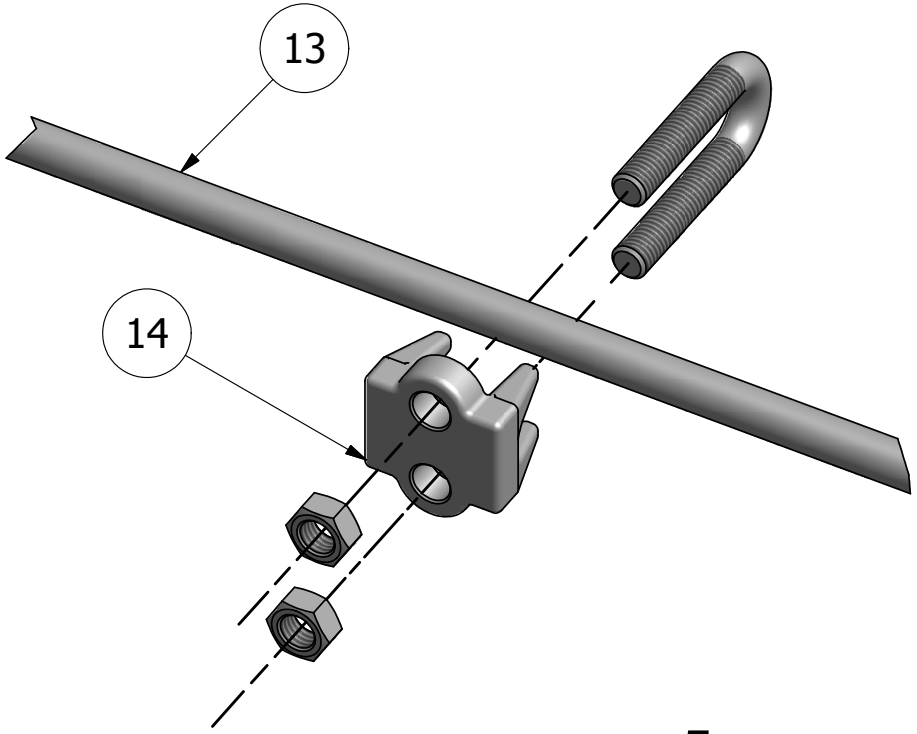

1

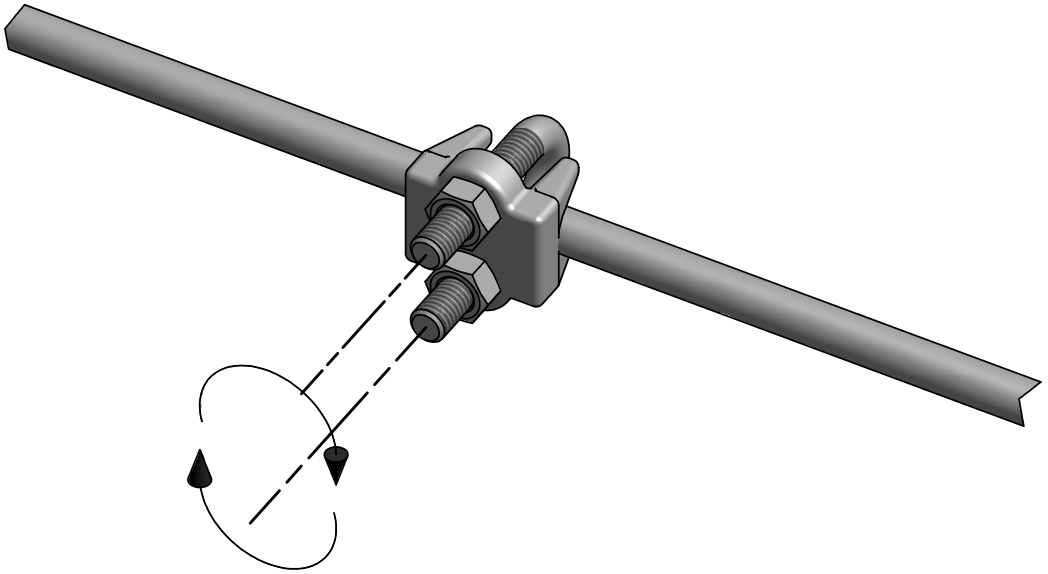

2

G008

FabricAir® Installation Drawing
2003-G008-000(2014-FEB)

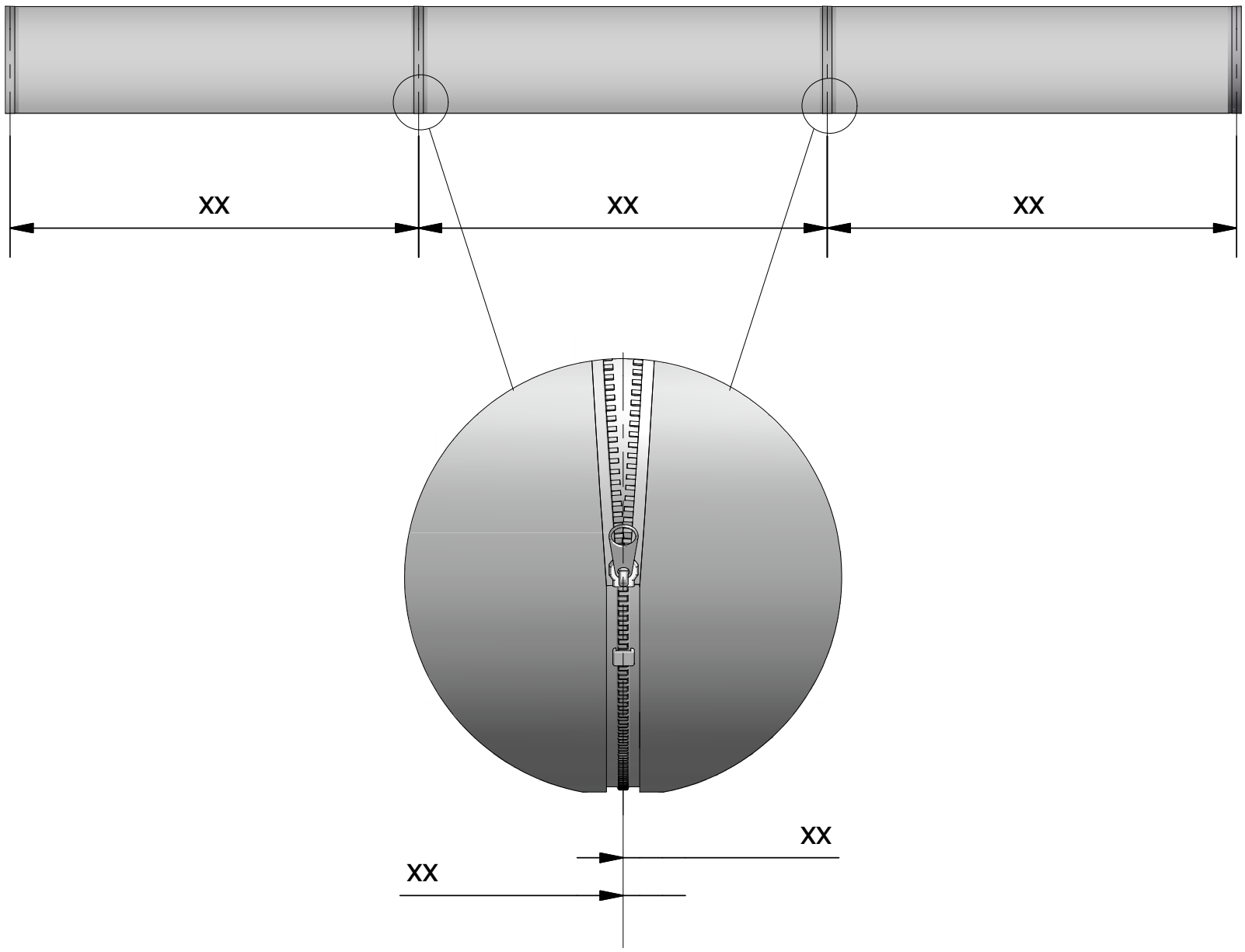

G025

FabricAir® Installation Drawing
2003-G025-000 (2015-JUN)

ASSEMBLY

1

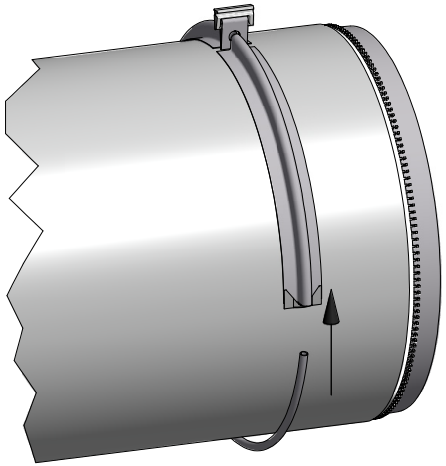

2

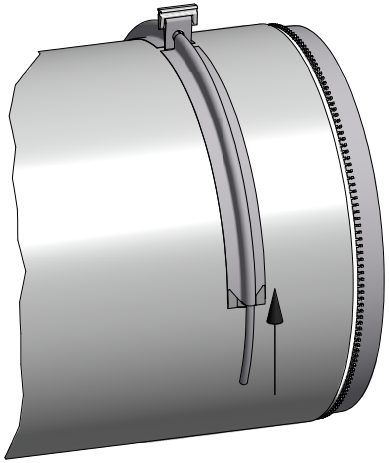

3

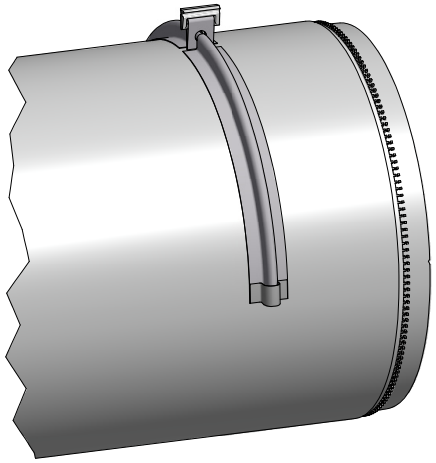

DISASSEMBLY

1

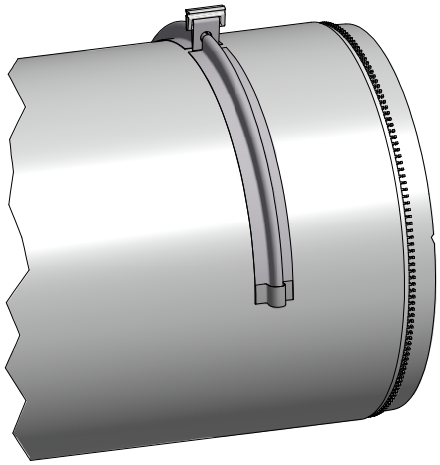

2

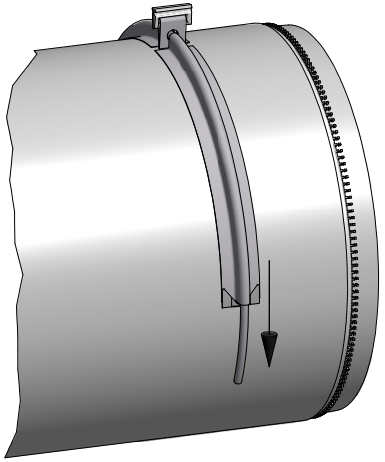

3

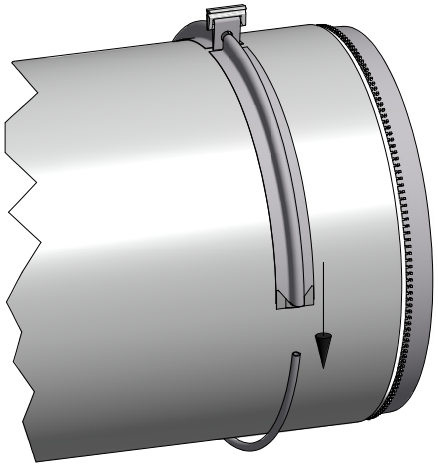

G027

FabricAir® Installation Drawing
2003-G027-000 (2014-FEB)

FabricAir

ORDER NO : 1473677

CONTENTS OF BOX NO. 1/2:

INSTRUCTION BAG	1 pcs.
-Drawing Included	1 pcs.

Distribution Ducts

Tag no. 100.1 Inlet Ø 1060 x 100	2 pcs.
Tag no. 100.2 Inlet Ø 1060 x 2625	2 pcs.
Tag no. 100.5 Inlet Ø 500 x 1000 x 9330	2 pcs.

Suspensions

(05) STRETCHER M6 x 90,GV	12 pcs
(14) CABLE LOCK 5MM,GV	52 pcs
(18) FIXING	2 pcs

STRAP , Y/2 , Ø 1100 / 43.3 "W

Box weight : 31 kg

Box size : 780x380x500mm

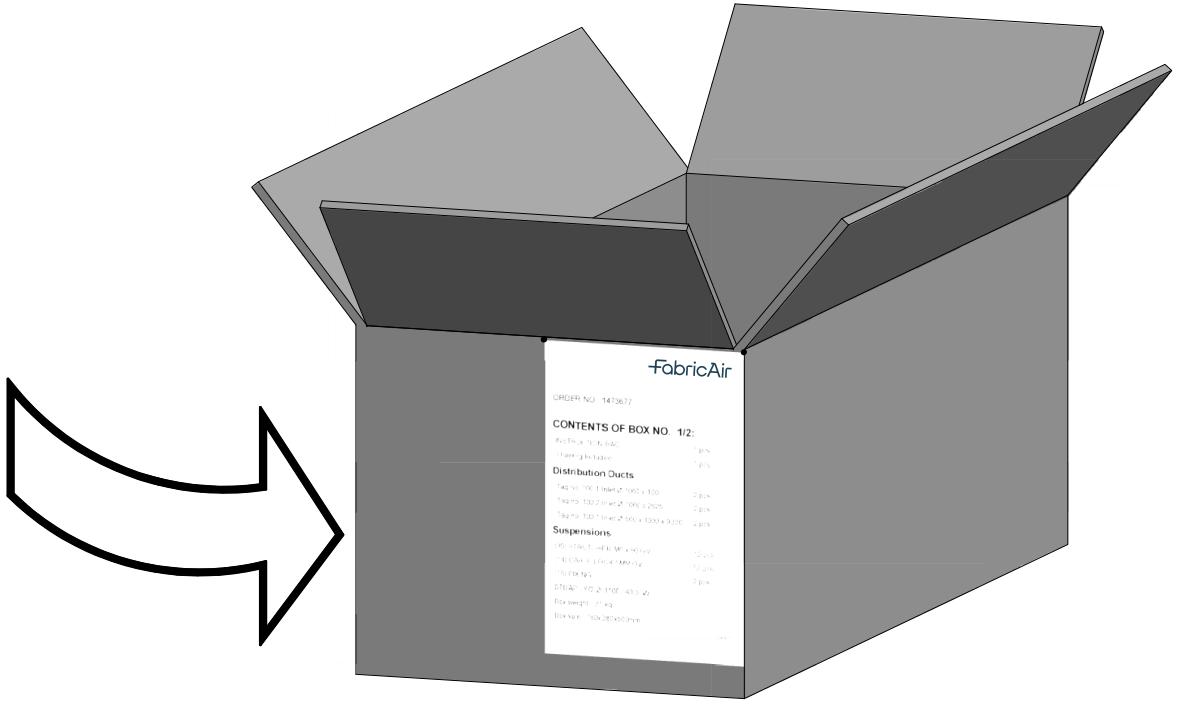

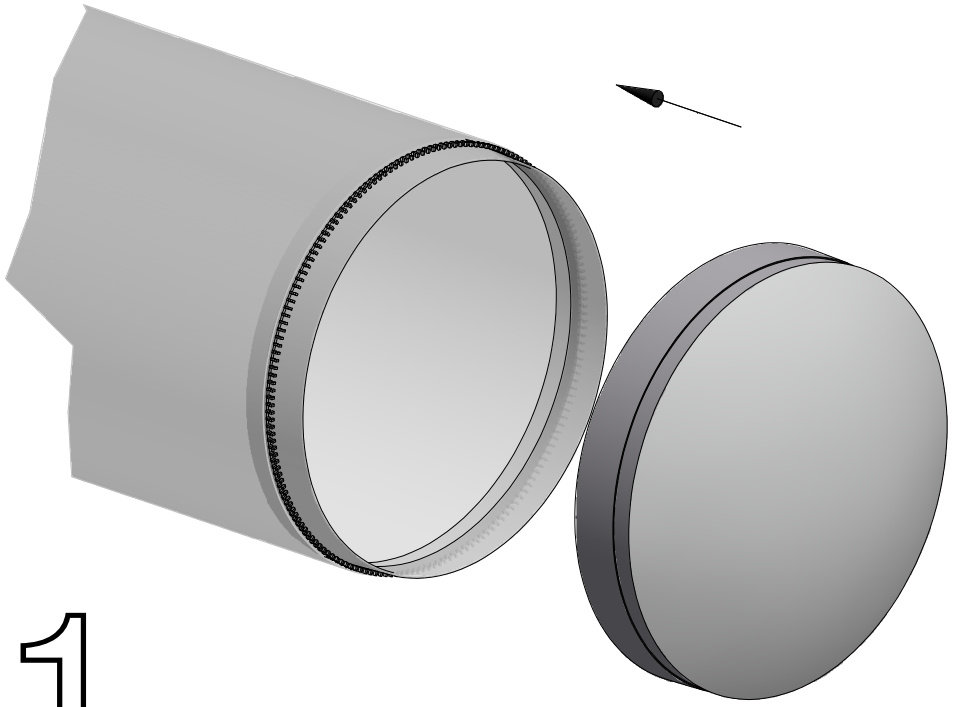

1

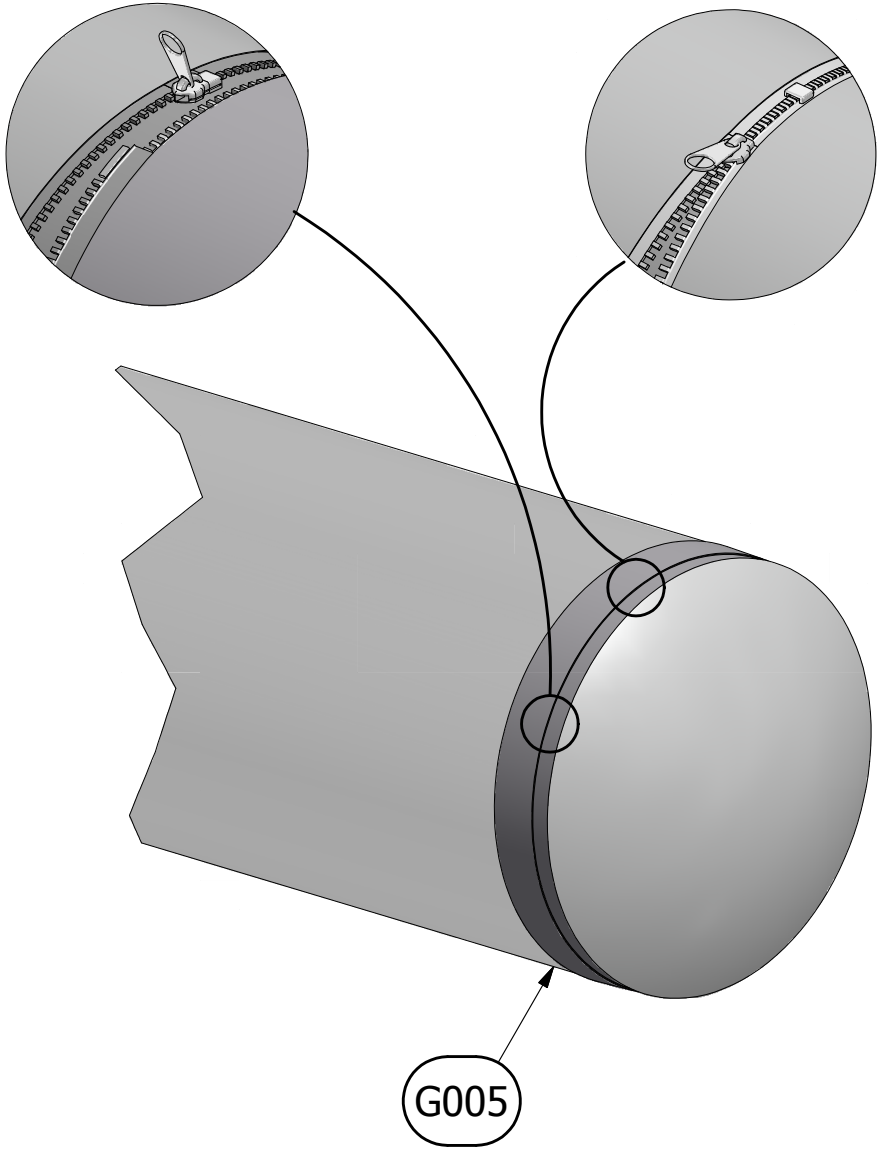

2

G036

FabricAir® Installation Drawing
2003-G036-000 (2015-JUN)

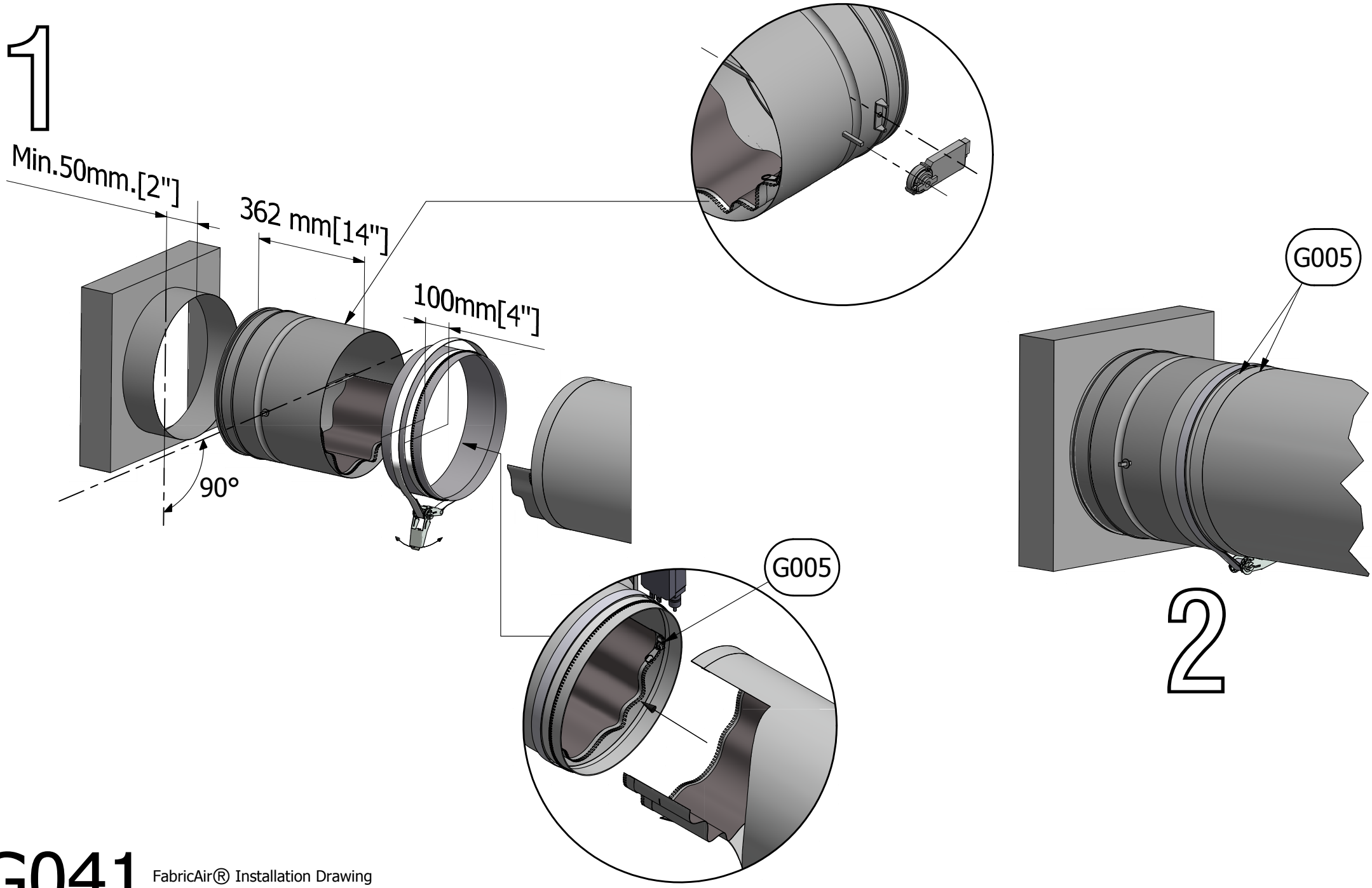

G041

FabricAir® Installation Drawing
2003-G002-000 (2019-SEP)

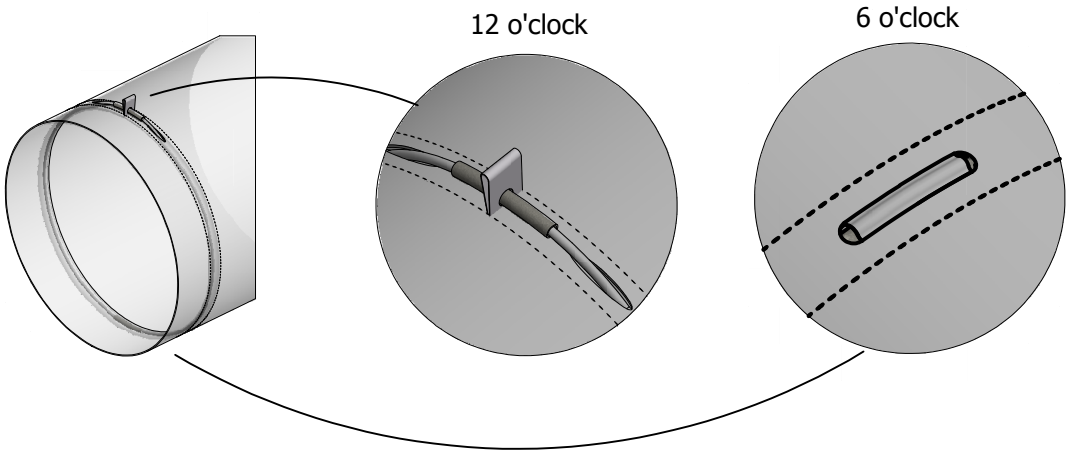

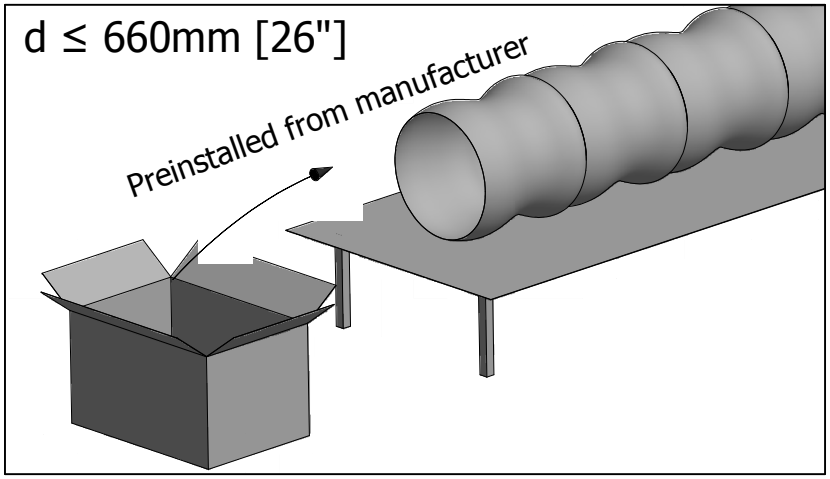

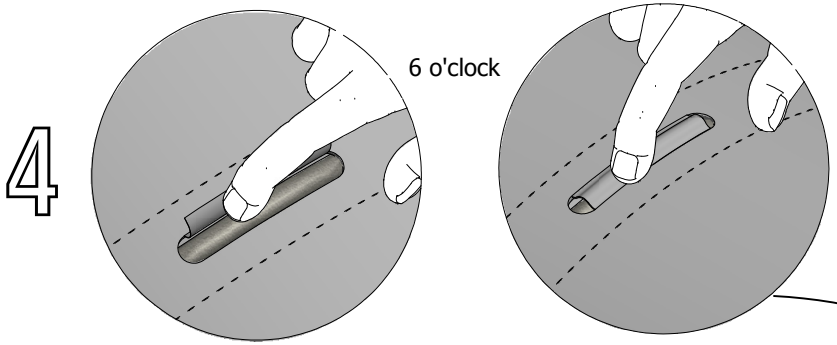

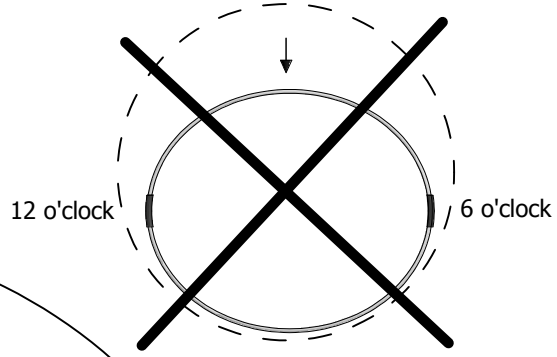

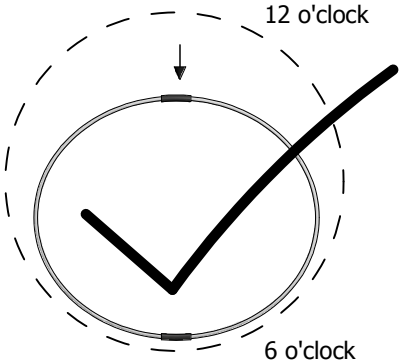

660mm [26"] < d ≤ 1270mm [50"]

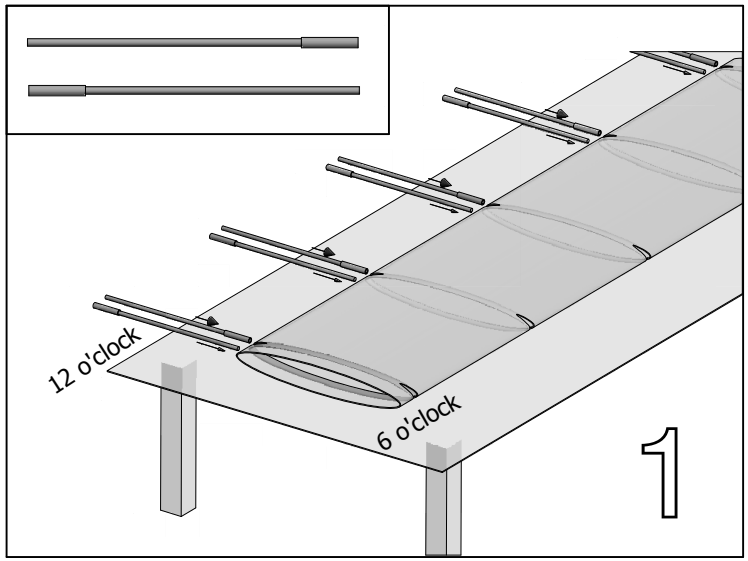

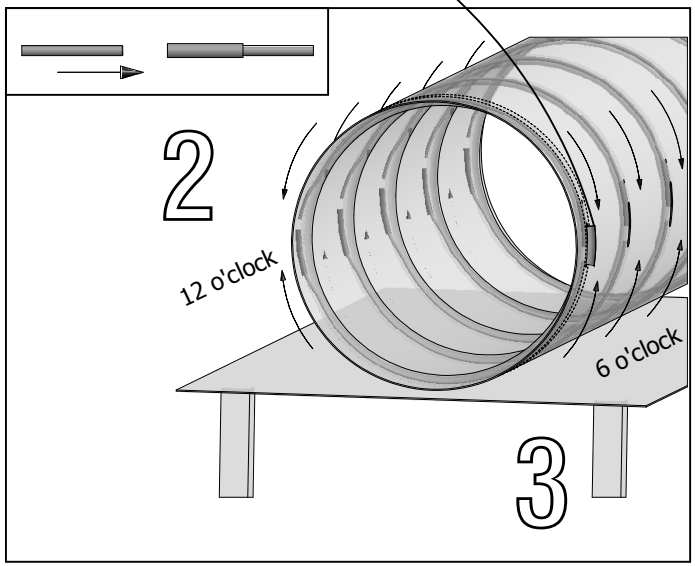

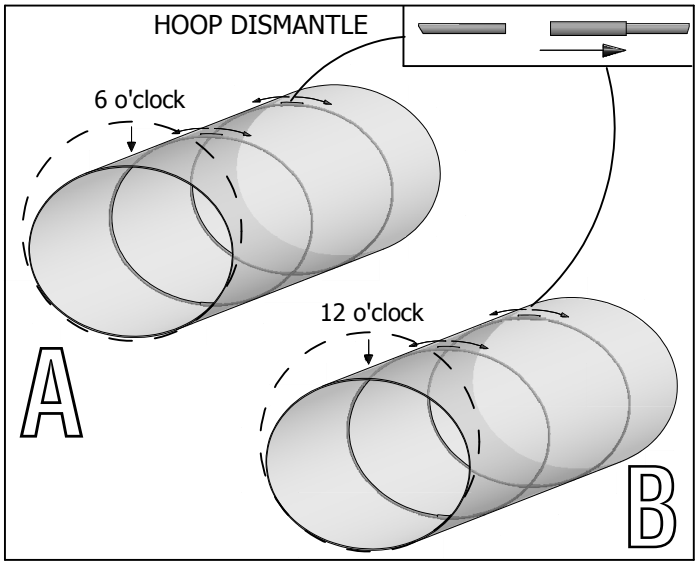

G044 FabricAir® Installation Drawing
2003-G044-000 (2019-NOV)

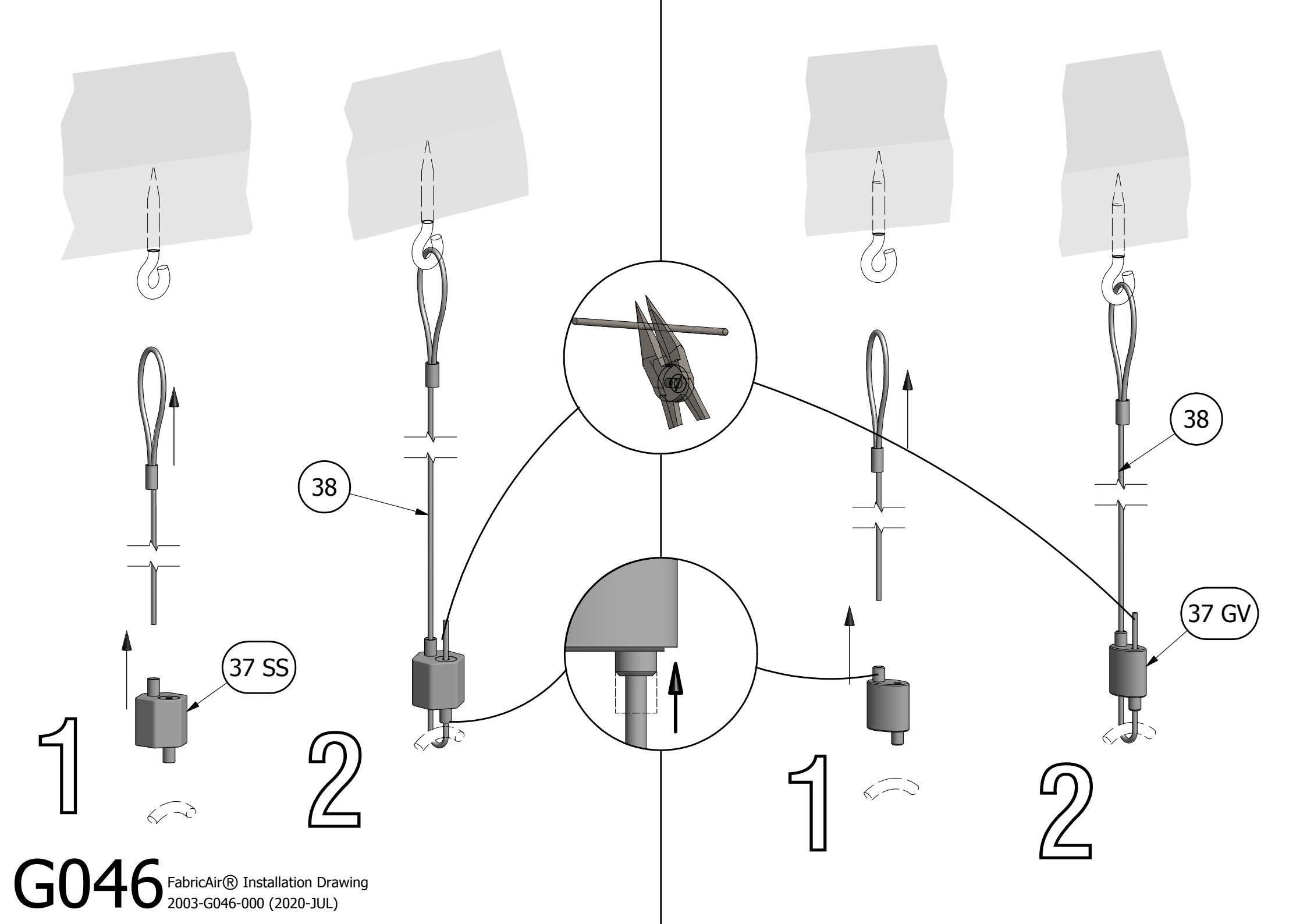

G046

FabricAir® Installation Drawing
2003-G046-000 (2020-JUL)

Installation of FabricAir® Taut Endcap

1

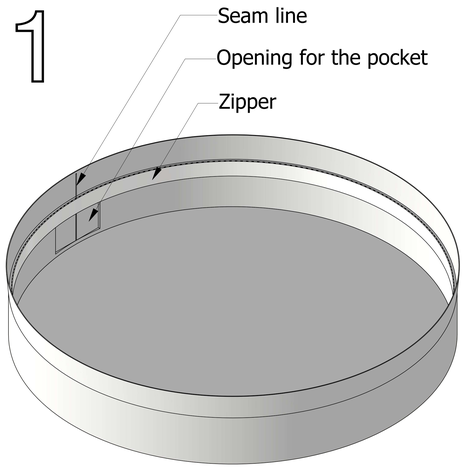

Lay the end cap flat on a clean surface

2

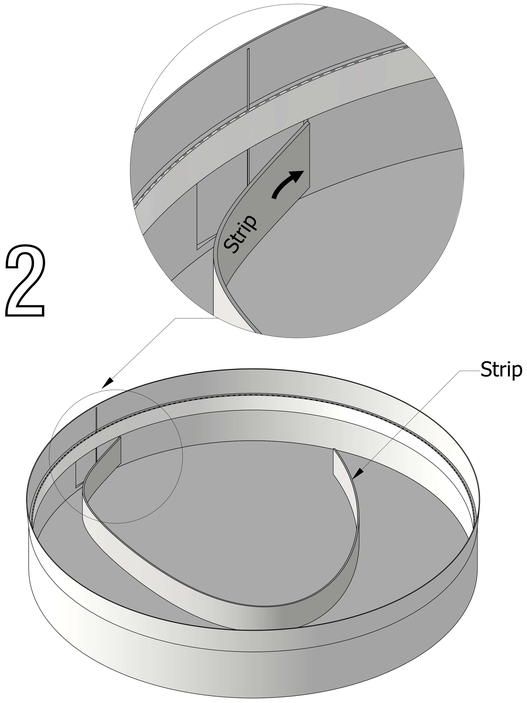

Push the strip in the pocket all around the end cap

3

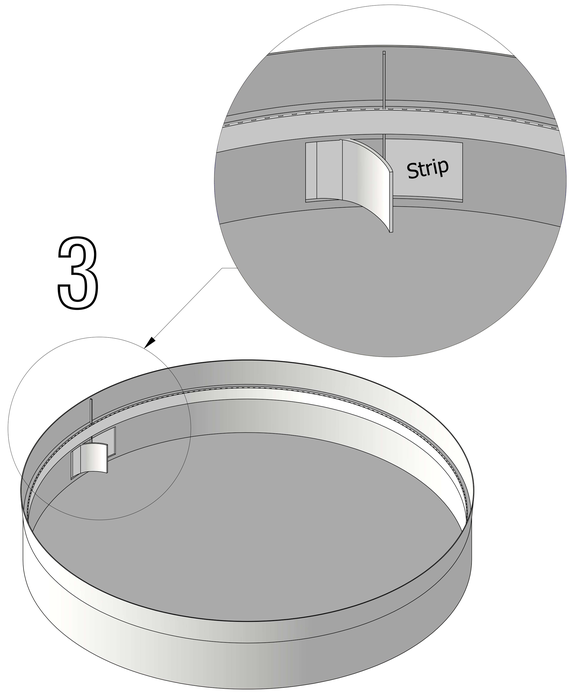

Align one end of the strip with the seam line

4

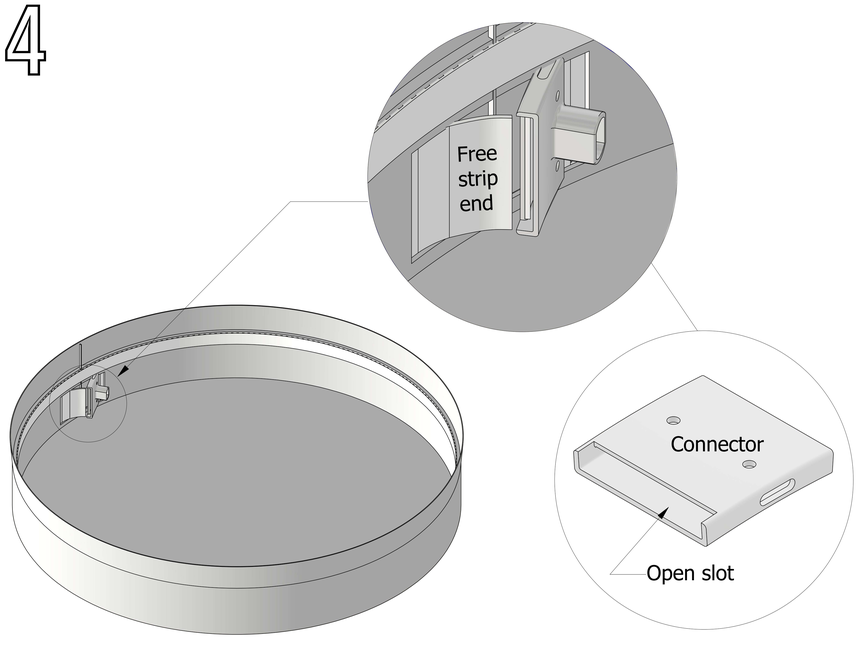

Put connector on the aligned strip end with the open slot towards the free strip end

5

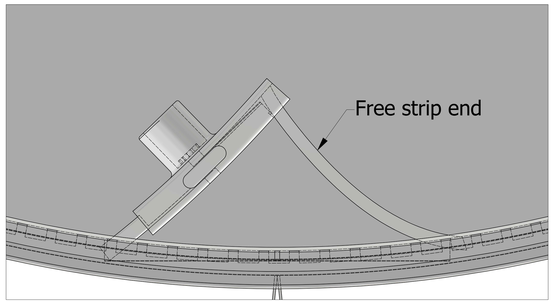

5.1 Place the free strip end in the open slot

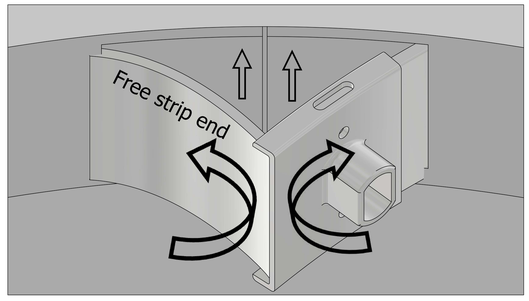

5.2 Hold the connector and the free strip end together and push until both strip ends are aligned

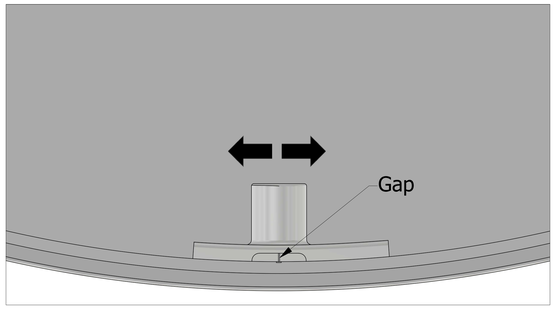

5.3 Using the knob slide the connector and make sure the gap between both strip ends is in the center of the connector

G049

Type 1
FabricAir® Installation Drawing
2003-G049-000 (2022- September)

Installation Video