FabricAir

Type 01

Installation Manual

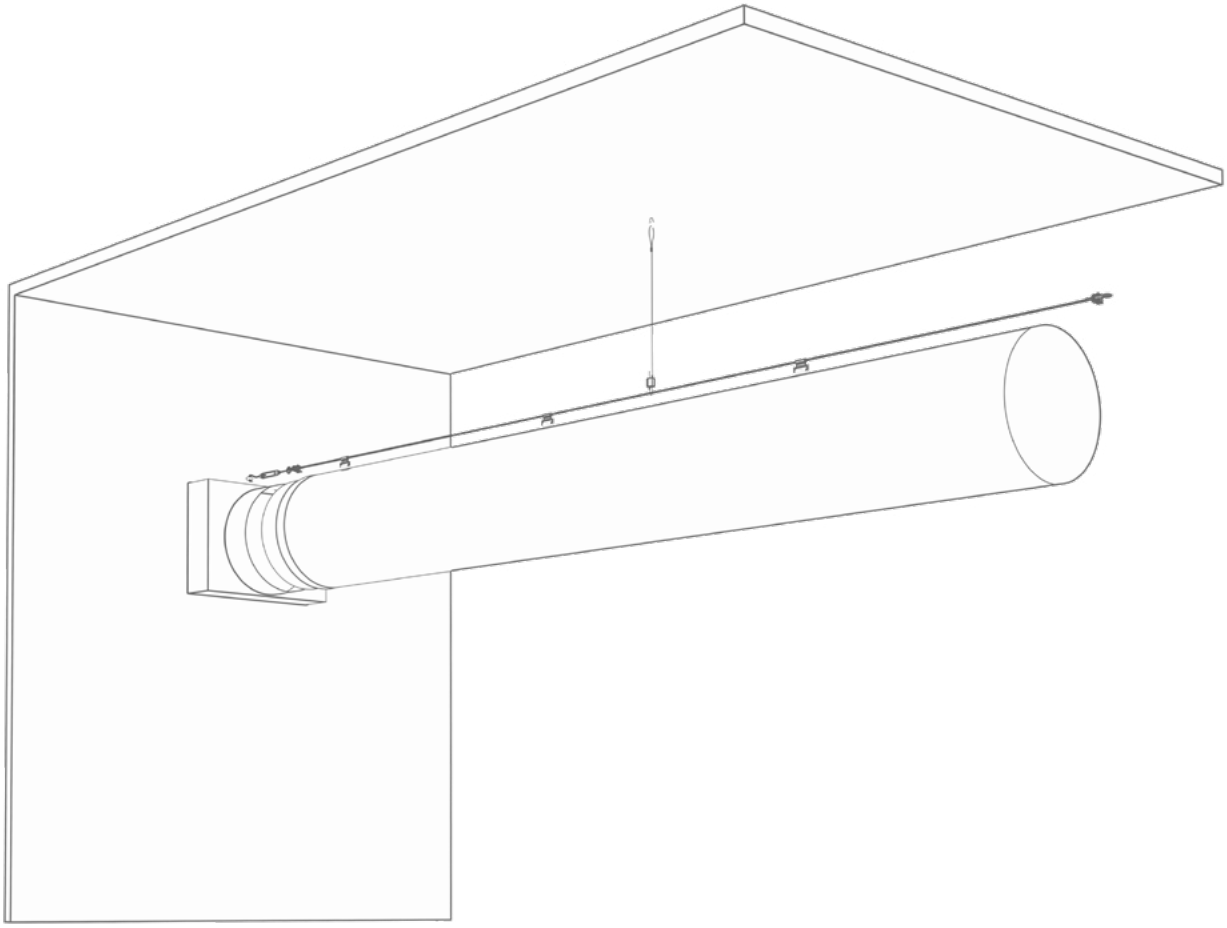

Type 01 cable suspension is compatible with classic, All-in-One, and Internal 360° Hoops ducts.

The horizontal cable is available as PVC coated Galvanized or PVC coated Stainless Steel aircraft cable.

Animation

Content

1.0 OPENING PACKAGE 3

1.1 Understanding components table 4

1.2 Type 01 suspension components 5

2.0 SUSPENSION INSTALLATION 6

2.1 Horizontal cable installation 6

2.2 Vertical hangers 8

2.3 Reductions 9

2.4 Detailed suspension installation 10

3.0 SHAPE RETAINING HARDWARE 11

3.1 All-in-One 11

3.2 Internal 360° Hoops assembly 12

3.3 Internal 360° Hoops dissasembly 13

4.0 INSTALLING THE FABRIC 14

4.1 Connection to sheet metal part with fixing strap 14

4.2 Fixing straps 14

4.3 Installation of duct on cable 15

4.4 Taut Endcap installation 16

1.0 OPENING PACKAGE

Video

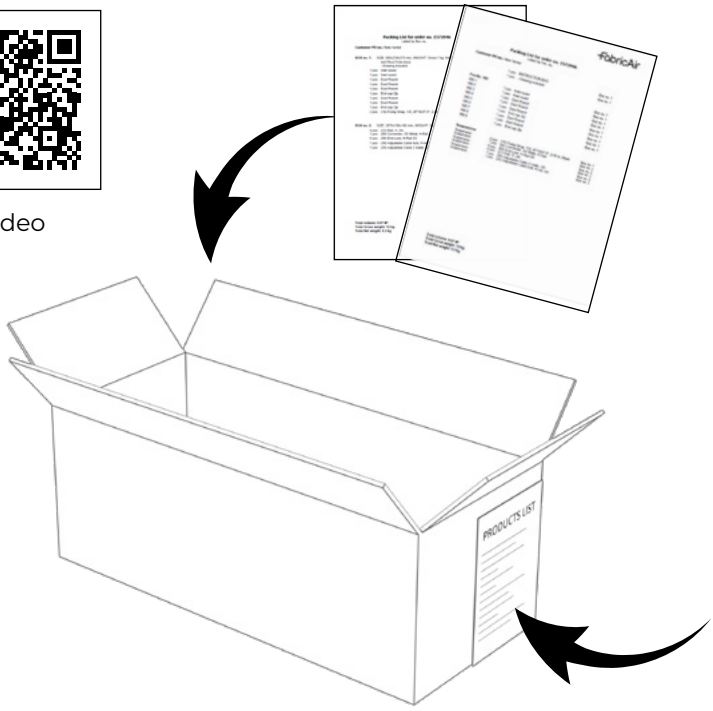

Box 1 includes all project documentation:

- System Drawing(s)
- Installation Guide
- Packing List (by box)
- Packing List (by positions)

Box number and contents list visible on external box label.

ORDER NO : 1473677 FabricAir

Contents of box NO. 1/2:

Instruction bag	1 pcs
Drawing included	1 pcs

Distribution Ducts

Tag. no. 100.1 Inlet
Tag. no. 100.2 Inlet

Suspensions

(05) Stretcher
(14) Cable lock
(18) Fixing

FabricAir

Packing List for order no. 1572946
Listed by Pos. no.

Customer PO no.: Nate Verbal

	1 pcs	INSTRUCTION BAG	Box no. 1
	1 pcs	- Drawing included	Box no. 1
Pos No. 100			
100.1	1 pcs	Inlet round	Box no. 1
100.2	1 pcs	Inlet round	Box no. 1
100.3	1 pcs	Duct Round	Box no. 1
100.4	1 pcs	Duct Round	Box no. 1
100.5	1 pcs	Duct Round	Box no. 1
100.6	1 pcs	End cap Zip	Box no. 1
100.7	1 pcs	Duct Round	Box no. 1
100.8	1 pcs	Duct Round	Box no. 1
100.9	1 pcs	End cap Zip	Box no. 1
Suspensions			
Suspension	2 pcs	(18) Fixing Strap, Y/Z, Ø710/27.9°, 2,46 m, Black	Box no. 1
Suspension	1 pcs	(06) Connector, SS Metal, H-Rail	Box no. 2
Suspension	6 pcs	(08) End Lock, H-Rail SS	Box no. 2
Suspension	4 pcs	(21) Rail, H, 2m	Box no. 2
Suspension	7 pcs	(38) Adjustable Cable 2 meter, SS	Box no. 2
Suspension	7 pcs	(36) Adjustable Cable lock, H-rail, SS	Box no. 2

Total volume: 0.07 M³
Total Gross weight: 12 kg
Total Net weight: 9.3 kg

FabricAir

Packing List for order no. 1572946
Listed by Box no.

Customer PO no.: Nate Verbal

BOX no. 1: SIZE: 590x210x275 mm, WEIGHT: Gross 7 kg. Net 5.9 kg.

	INSTRUCTION BAG	
	- Drawing included	
1 pcs	Inlet round	Tag No. 100.1
1 pcs	Inlet round	Tag No. 100.2
1 pcs	Duct Round	Tag No. 100.3
1 pcs	Duct Round	Tag No. 100.4
1 pcs	Duct Round	Tag No. 100.5
1 pcs	End cap Zip	Tag No. 100.6
1 pcs	Duct Round	Tag No. 100.7
1 pcs	Duct Round	Tag No. 100.8
1 pcs	End cap Zip	Tag No. 100.9
2 pcs	(18) Fixing Strap, Y/Z, Ø710/27.9°, 2,46 m, Black	Suspension

BOX no. 2: SIZE: 2070x150x100 mm, WEIGHT: Gross 5 kg. Net 3.45 kg.

4 pcs	(21) Rail, H, 2m	Suspension
1 pcs	(06) Connector, SS Metal, H-Rail	Suspension
6 pcs	(08) End Lock, H-Rail SS	Suspension
7 pcs	(36) Adjustable Cable lock, H-rail, SS	Suspension
7 pcs	(38) Adjustable Cable 2 meter, SS	Suspension

Total volume: 0.07 M³
Total Gross weight: 12 kg
Total Net weight: 9.3 kg

- There are two packing lists – by box and by position. Each box may contain either suspension components or ducting. Each duct section/component has a Tag number (Tag No. XXX.X). Suspension elements have part ID numbers. Example: (21) H-Rail, 2 m. In this case, (21) is part ID.
- Tag numbers are marked in assembly sequence. Assembly of ducting should start with Tag No. XXX.1 and continue accordingly.

1.1 Understanding components table (located on system drawing)

COMPONENTS								
Tag#	Fabric	Color	Flow model			Suspension		
			Primary	Placement	Secondary	Type	Strap length	Material
350404600025	Combi 70	Black 3004			FabFlow		0	GV
100.1	Combi 70	Black 3004			FabFlow		0	GV
100.2	Combi 70	Black 3004	SonicFlow SonicFlow SonicFlow SonicFlow SonicFlow	2:00 3:00 4:00 5:00 6:00	FabFlow	Type 01 AiO	50 mm [2"]	GV

THE CHART SHOWN ABOVE IS AN EXAMPLE

Tag#: the unique number for that section, this is the identifying/unique number for that section.

Tag 3504..##..25: this part is the FabricAir flow straightener that helps manage turbulence and can be zipped into any joint.

Fabric: the fabric selected for this project.

Color: the color selected (standard meaning to select from the standard color chart for that fabric).

Flow model primary: primary dispersion method.

Placement: position of the holes; direction of airflow based on looking in the direction of airflow with the air hitting you from behind.

Flow model secondary: FabFlow for permeable fabrics.

Suspension type: the suspension model selected for the project.

Strap length: the length of the strap from the top of the duct to the suspension.

1.2 Type 01 suspension components (located on packing lists)

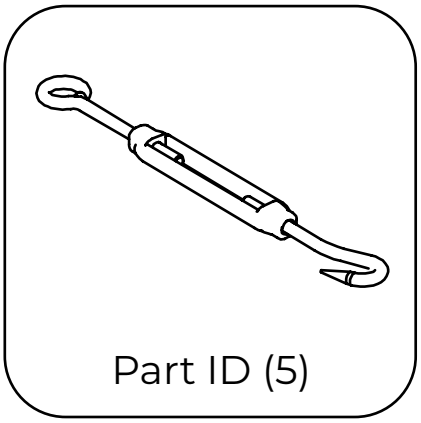

Stretcher for horizontal cable

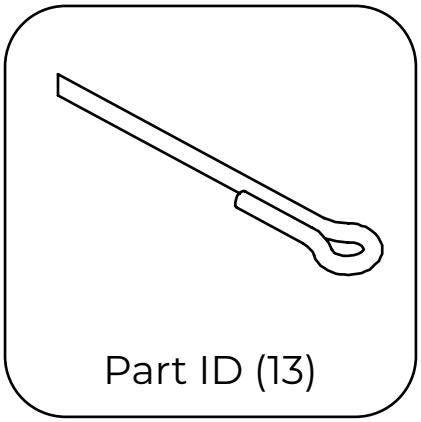

Horizontal cable

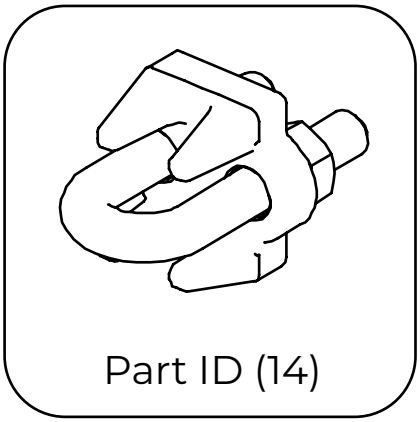

Cable lock for horizontal cable

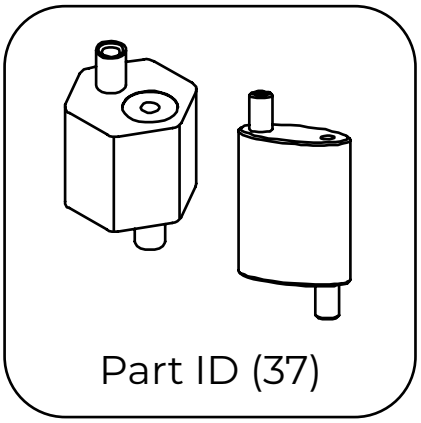

Adjustable cable lock for vertical hangers
Available in
2 options – GV and SS

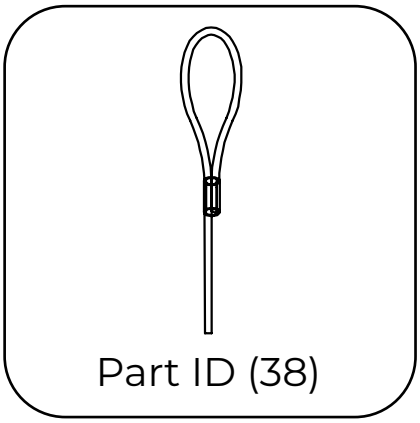

Adjustable cable with loop

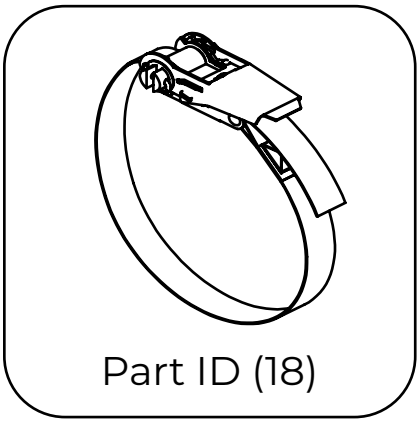

Fixing strap for duct
Ø > 508 mm [20"]

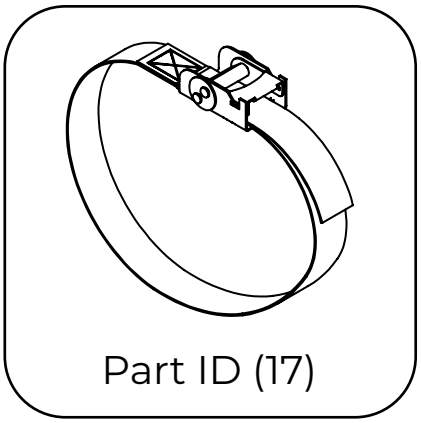

Fixing strap for duct
Ø < 508 mm [20"]

2.0 SUSPENSION INSTALLATION

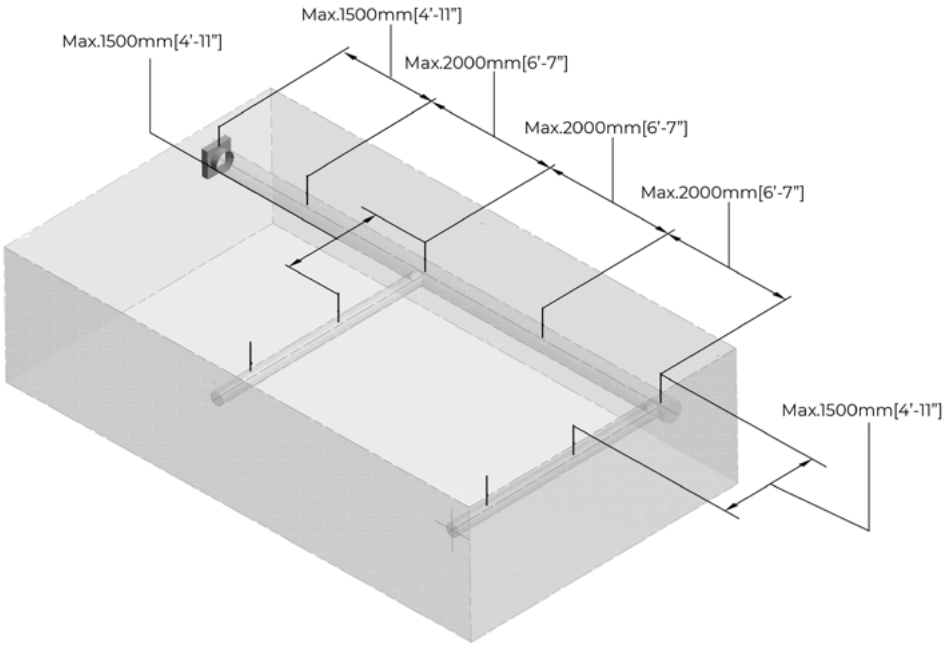

2.1 Horizontal cable installation

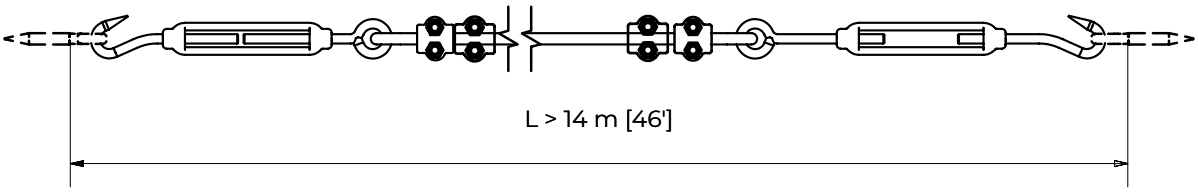

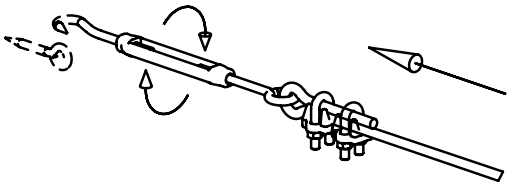

- Use lasers or chalk lines to ensure horizontal and vertical anchor points are properly aligned.
- Carefully uncoil cable to prevent twisting and tangling.
- Ensure that the wall is strong enough to deal with the tension from the cable. The longer the horizontal cable is, the more tension you have.
- Anchor points may be strengthened as necessary by adding a support plate on either side of the wall.

- In case there is a long distance from ends of fabric ducting to walls, then an anchor point may be attached to the sheet metal connection. At the end of the duct, the cable can be supported by an anchor point connected to the ceiling.
- Lenght of horizontal cable: Always ensure there is minimum 300 mm [12"] additional cable at the end, which will leave space for the ducting to extend in length when pressurized.
- If the cable must be mounted less than 100 mm [4"] from the ceiling structure, the hangers can be replaced with eyebolts. Eyebolts to be attached to the ceiling structure, and easily pull the cable through the eyebolts.

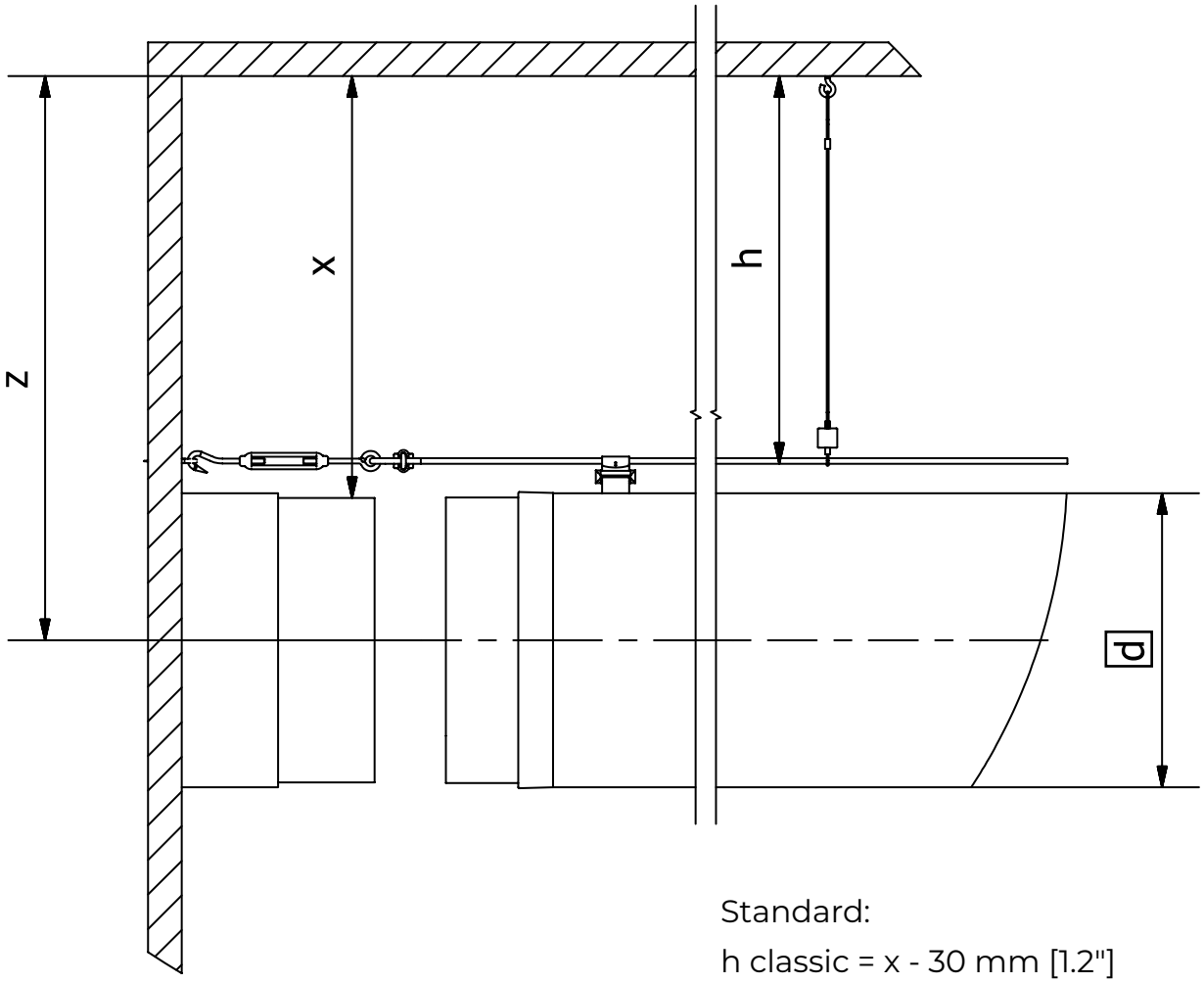

Standard:

h classic = x - 30 mm [1.2"]

h all-in-one = x - 50 mm [2"]

h internal 360° = x - 50 mm [2"]

z = x + 1/2 d

Dimensions given in squares (□) can be found in system drawings packed in the shipping box.

1. Straps can be manufactured in any specified length, upon request.

2. Vertical hangers can be delivered in 2 m [7'], 5 m [16'], 10 m [32'] length, depending on distance from ceiling structure to FabricAir system.

NOTE! Hardware quantities for vertical hangers are calculated based on 2 m [6'-7"] spacing. Installer must request additional hardware if vertical anchor spacing is to be less than 2 m [6'-7"].

Standard strap length for the 3 possible options:

classic: S = 30 mm [1.2"] minimum length;

All-in-One / Internal 360° Hoops: S = 50 mm [2"] minimum length.

2.2 Vertical hangers

- Connection to ceiling structure shall be supplied by the contractor.
- Adjustable cable with loop – available in 2/5/10 m [7/16/32'] length.

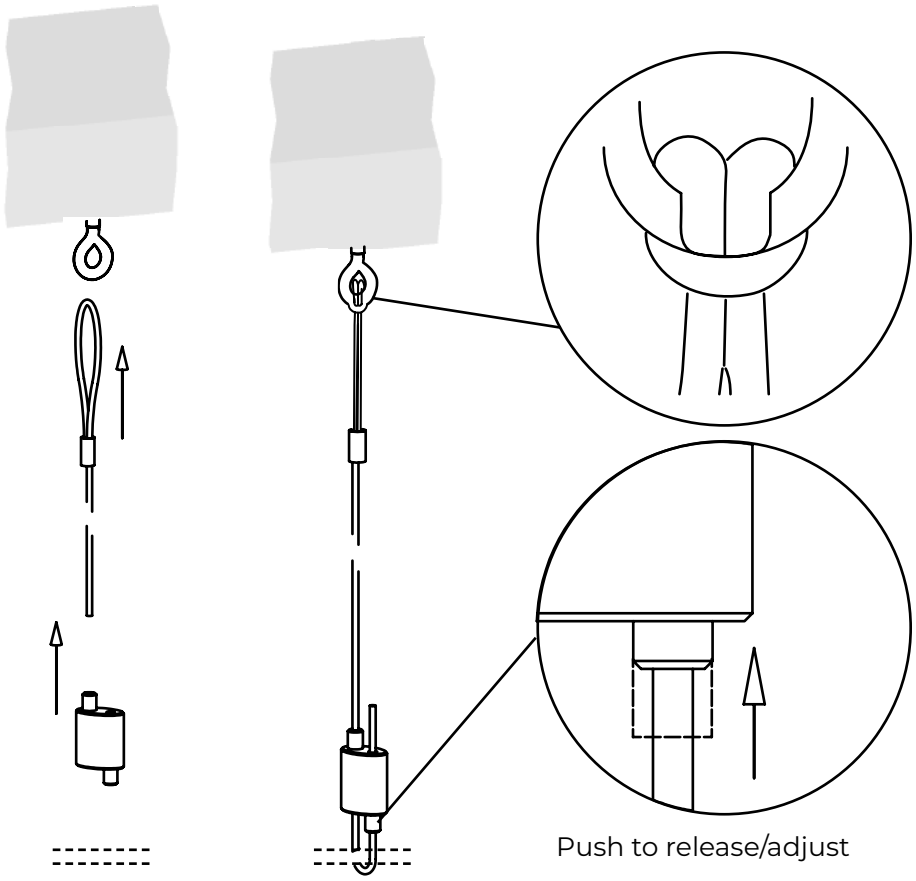

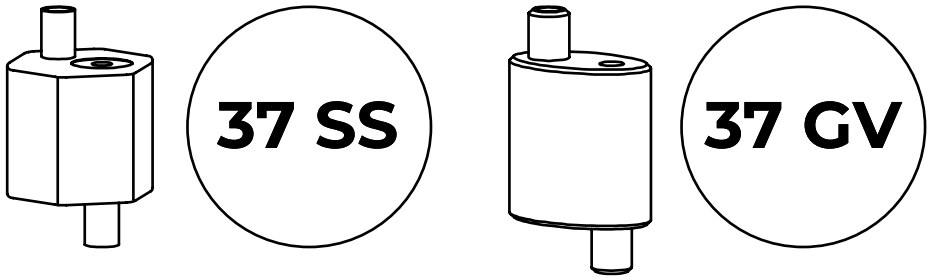

- In case of long fabric ducting, we recommend to install the vertical hangers first, adjust the height and then pull the horizontal cable through all the hangers.
- The weight of a FabricAir system is very low (< 3 kg/m [< 2 lbs/ft]). Anchors to the structure may be selected accordingly (5:1 safety factor is always recommended).
- In corrosive areas we recommend to seal all connections made in walls/ceilings, to prevent corrosion of the structure. Always use approved paint/sealant.

2.3 Reductions

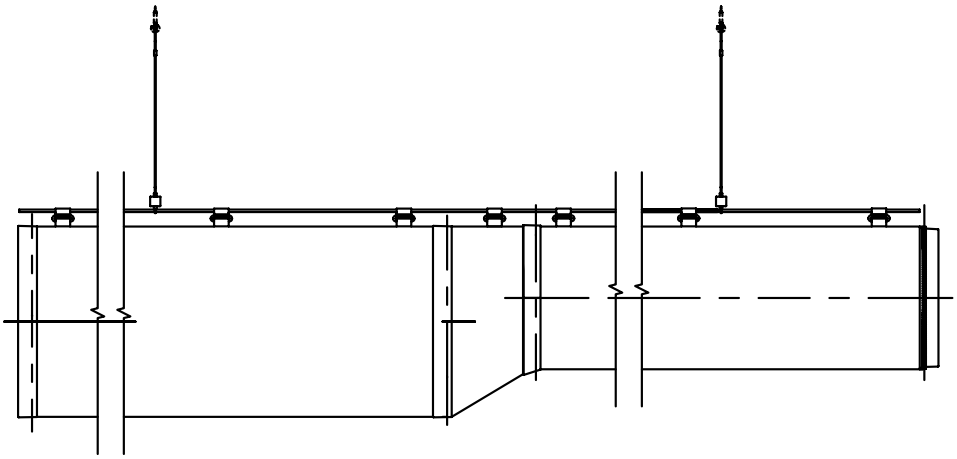

Reduction – center aligned

Single cable – with extended straps

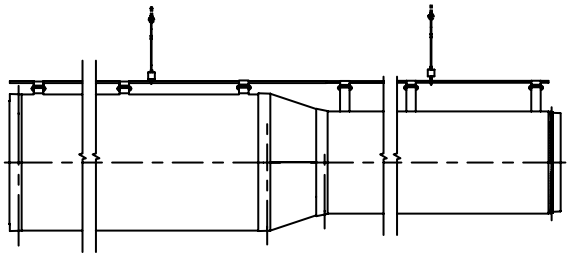

Reduction – center aligned

Multiple Cables

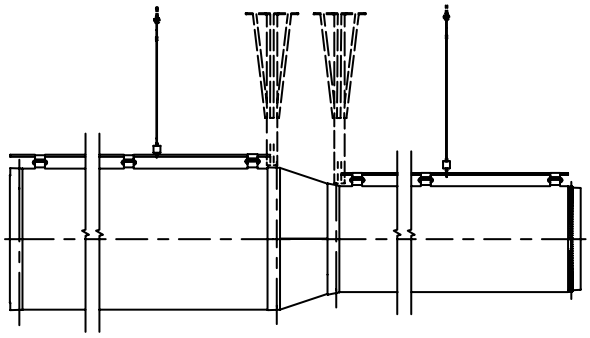

Reduction – bottom aligned

Single cable – with extended straps

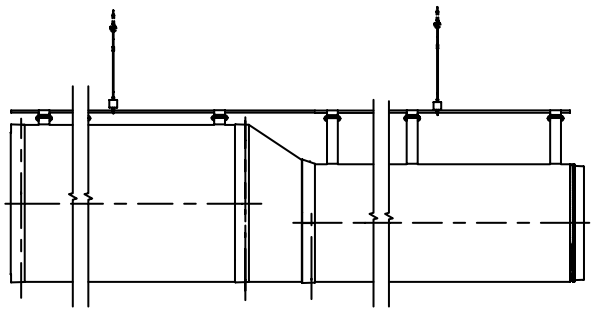

Reduction – bottom aligned

Multiple Cables

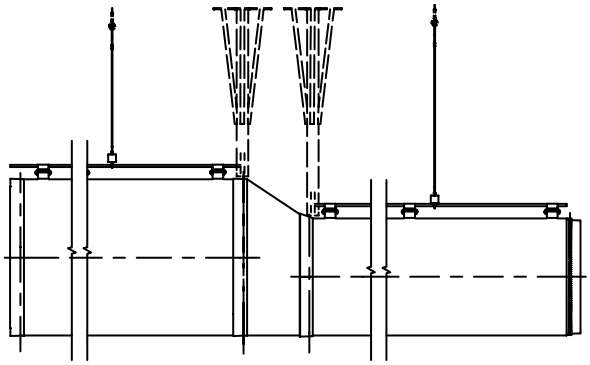

2.4 Detailed suspension installation details

Use QR code for more detailed information for each type.

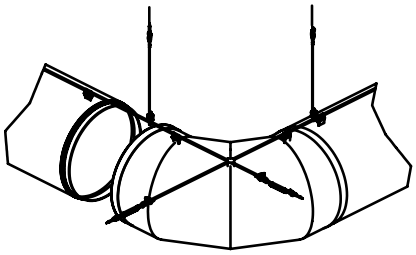

Bendings and elbows
All degrees and sizes

Drawings

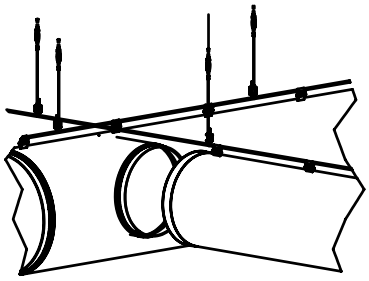

Branches
Top/center/bottom aligned

Drawings

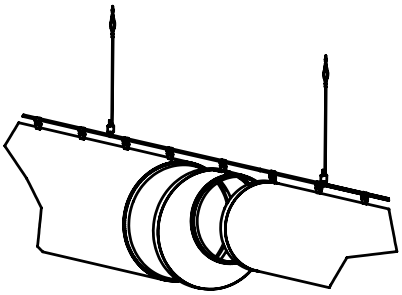

Reductions
Top/center/bottom aligned

Drawings

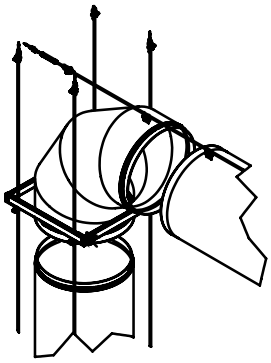

Vertical duct suspension methods

Drawings

3.0 SHAPE RETAINING HARDWARE

Shape retention solution for Type 01 suspension.

Standard All-in-One strap length = 50 mm [2"].

Comes pre-installed from the factory.

3.1 All-in-One

Video

Assembly

1

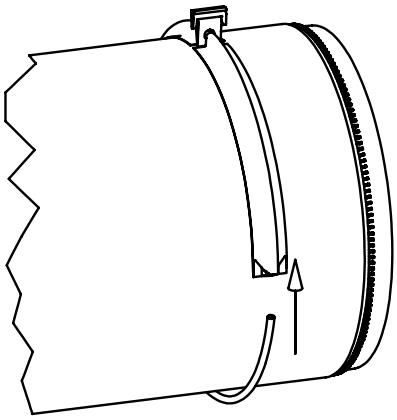

2

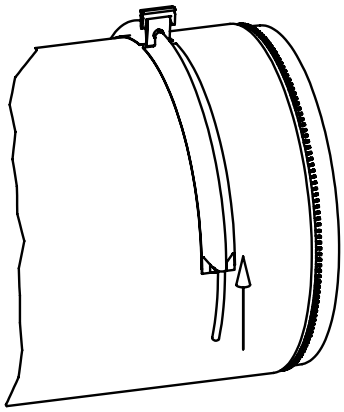

3

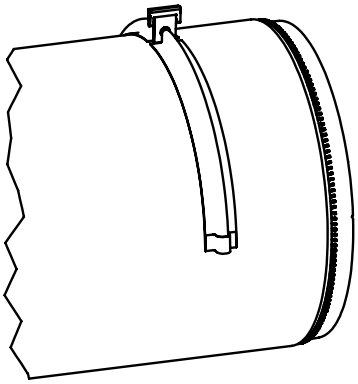

Disassembly

1

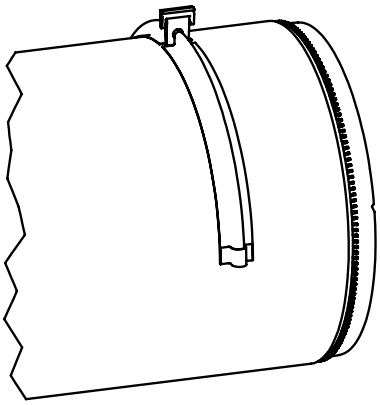

2

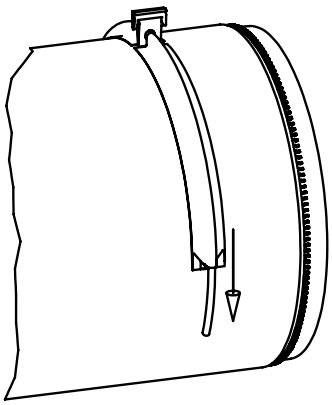

3

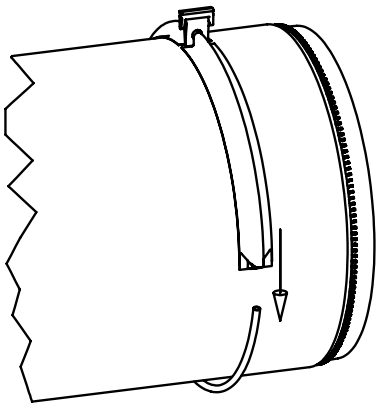

3.2 Internal 360° hoops assembly

Optional shape retention solution for Type 01 suspension.

Standard 360° Internal Hoops strap length = 50 mm [2"].

Arrives from the factory: Ø ≤ 660 mm [26"]

Video

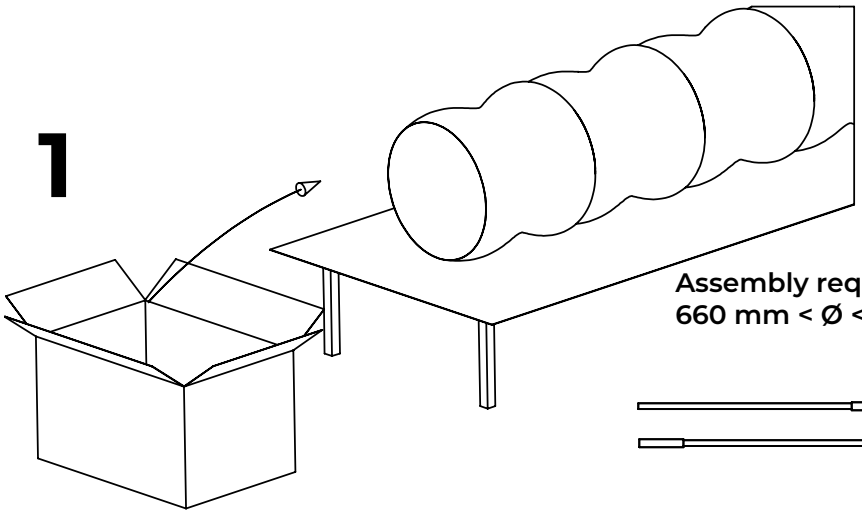

Assembly required in some cases:
660 mm < Ø < 1270 mm [26" < Ø < 50"]

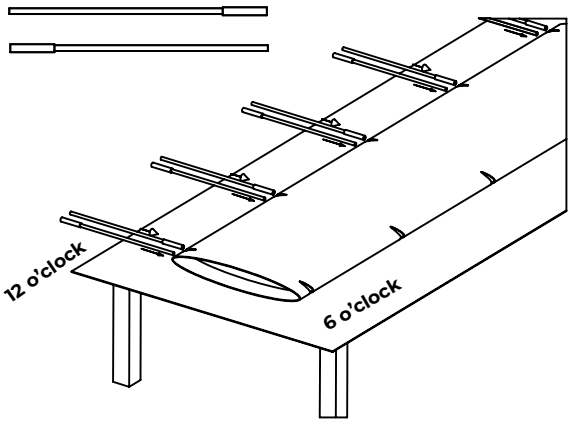

Connecting ends of hoops

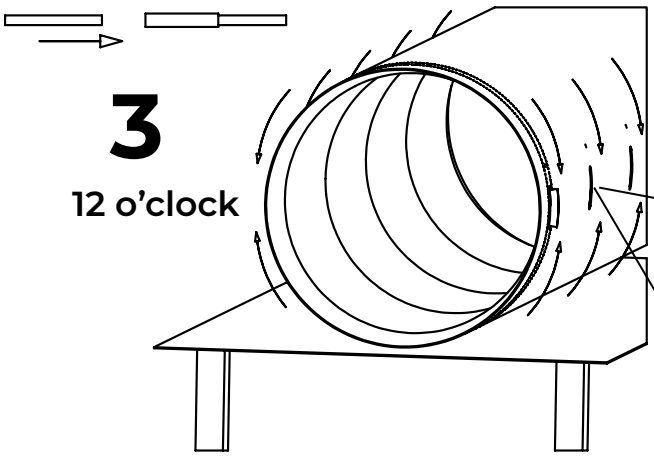

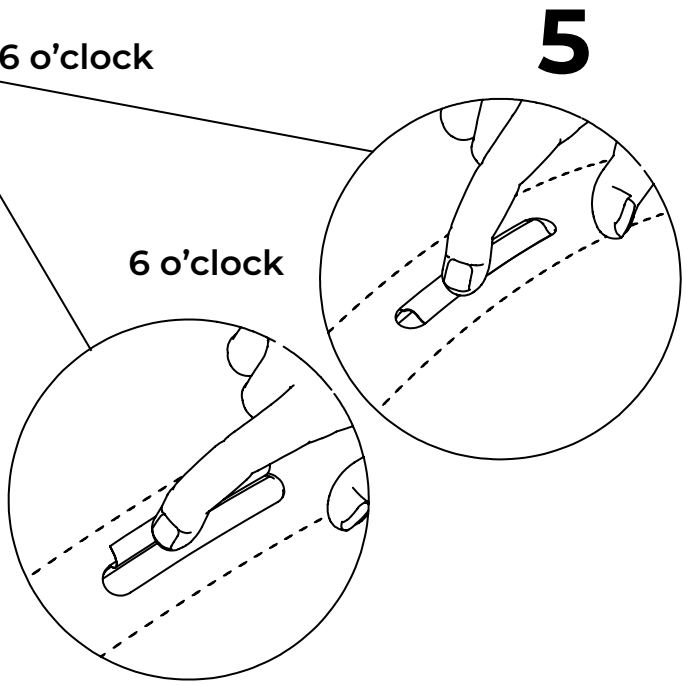

Small fabric flap for concealing hoop

3.3 Internal 360° hoops disassembly

To remove the internal hoops, ensure that the connectors are arranged at 6 and 12 o'clock.

Rotate the duct to access the hoop through the slotted access hole at 6 o'clock.

Press down to flatten the connection point and slide rod out of metal sleeve.

Rotate duct to access 12 o'clock access slot and repeat to remove.

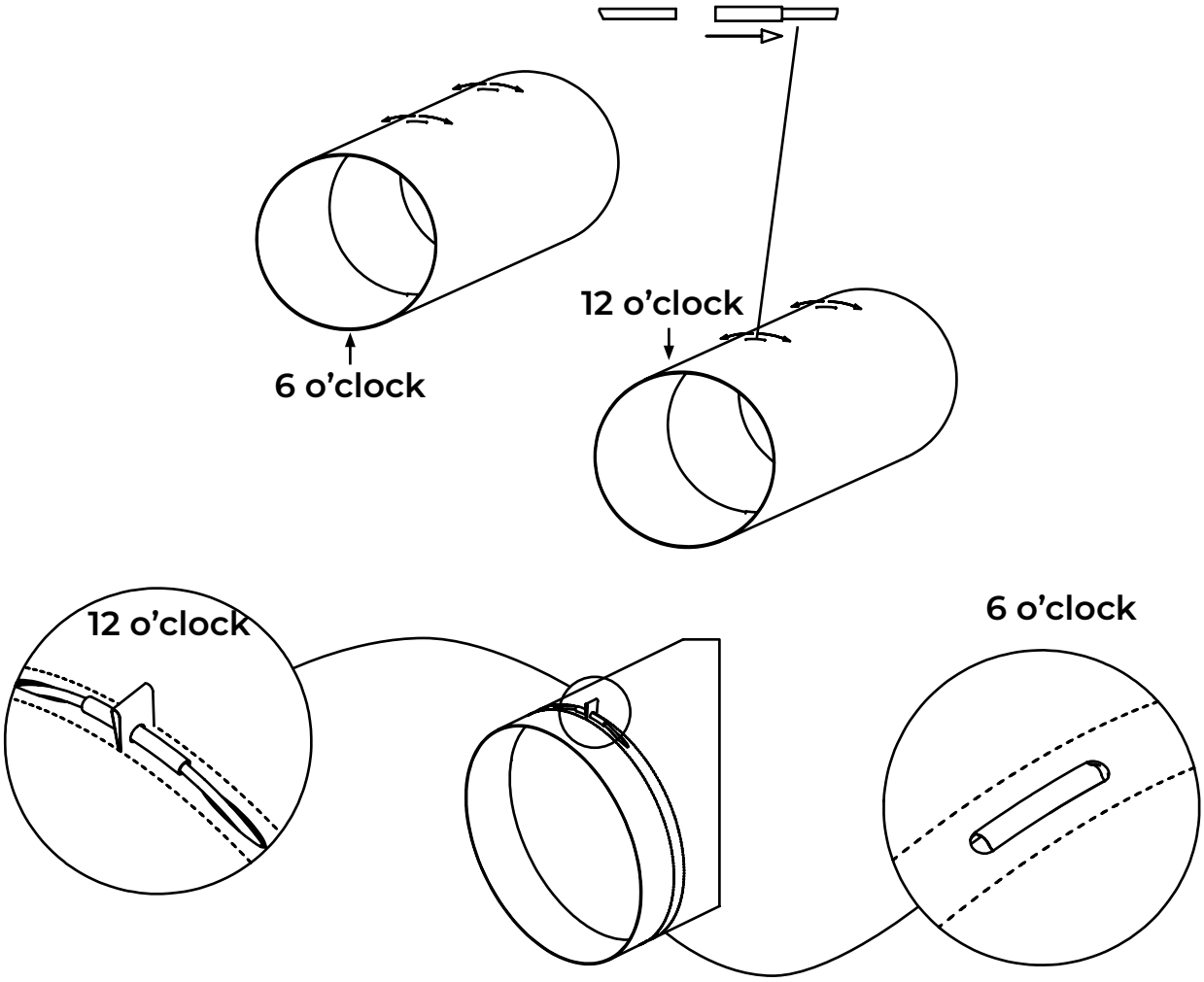

Deform circle to remove hoop.

While dismanteling hoops, keep hoop connector at the 12 o'clock.

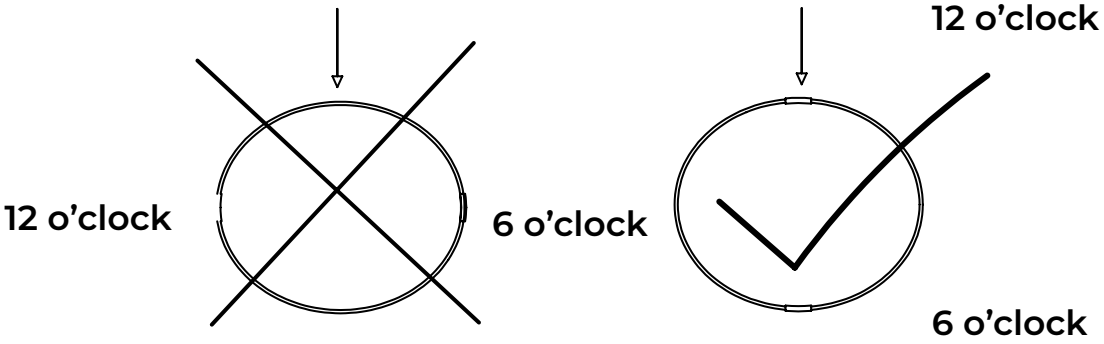

4.0 INSTALLING THE FABRIC

4.1 Connection to sheet metal part with fixing strap

	Basic inlet	Cover inlet	Smart inlet
Min. metal duct length required	50 mm [2"]	50 mm [2"]	75 mm [3"]
Inlet length	Min. 50 mm [2"] Std. 100 mm [4"]	Min. and std. 100 mm [4"]	Min. and std. 100 mm [4"]

Basic inlet

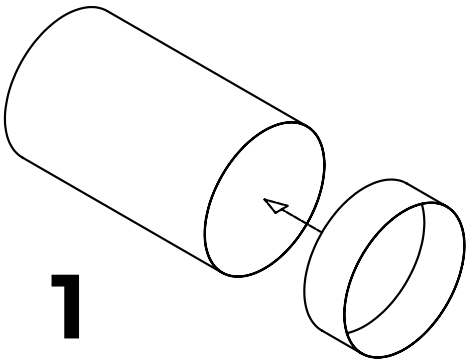

1

Put inlet on the duct

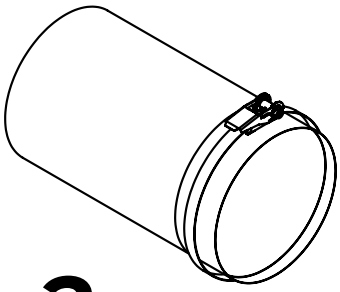

2

Put and tighten the fixing strap

Cover inlet

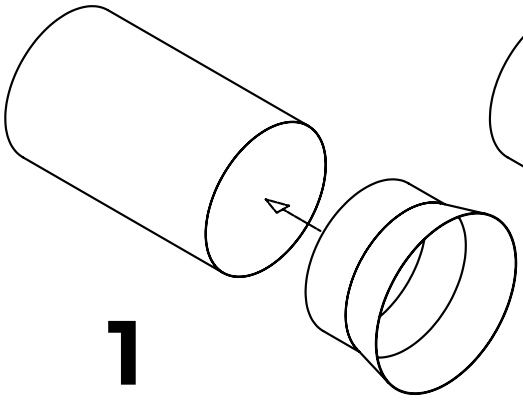

1

Put inlet on the duct

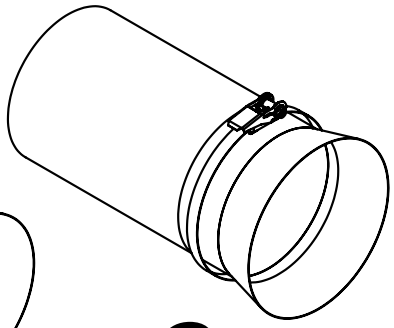

2

Put and tighten the fixing strap

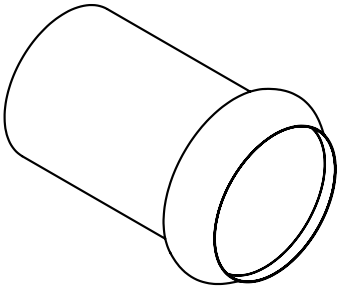

3

Close the cover

Smart inlet

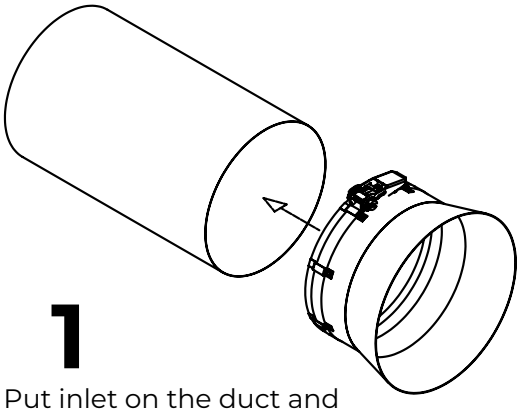

1

Put inlet on the duct and tighten the fixing strap

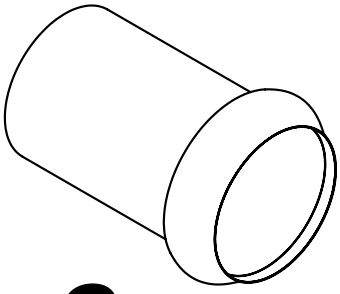

2

Close the cover

4.2 Fixing straps

Part ID (17) Duct Ø < 510 mm [20"]

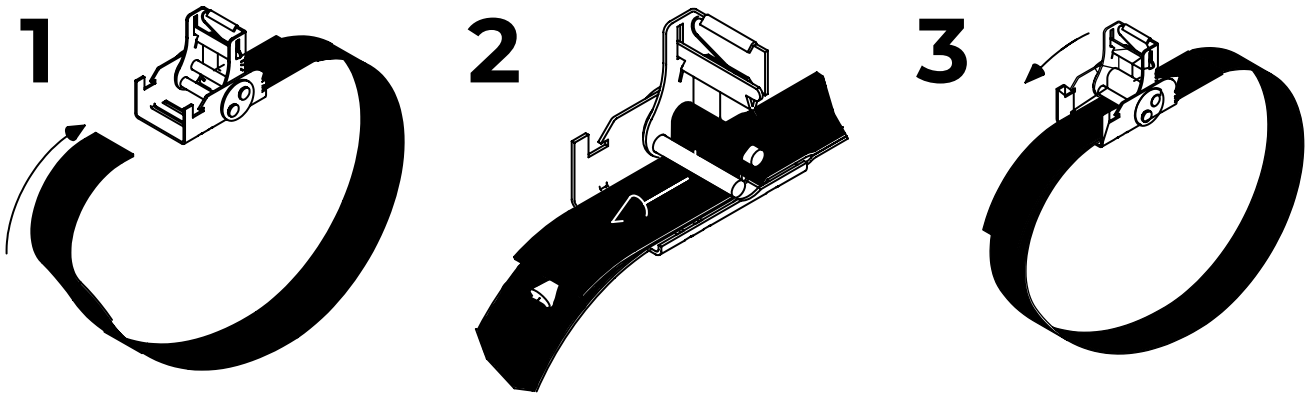

Part ID (18) Duct Ø >= 510 mm [20"]

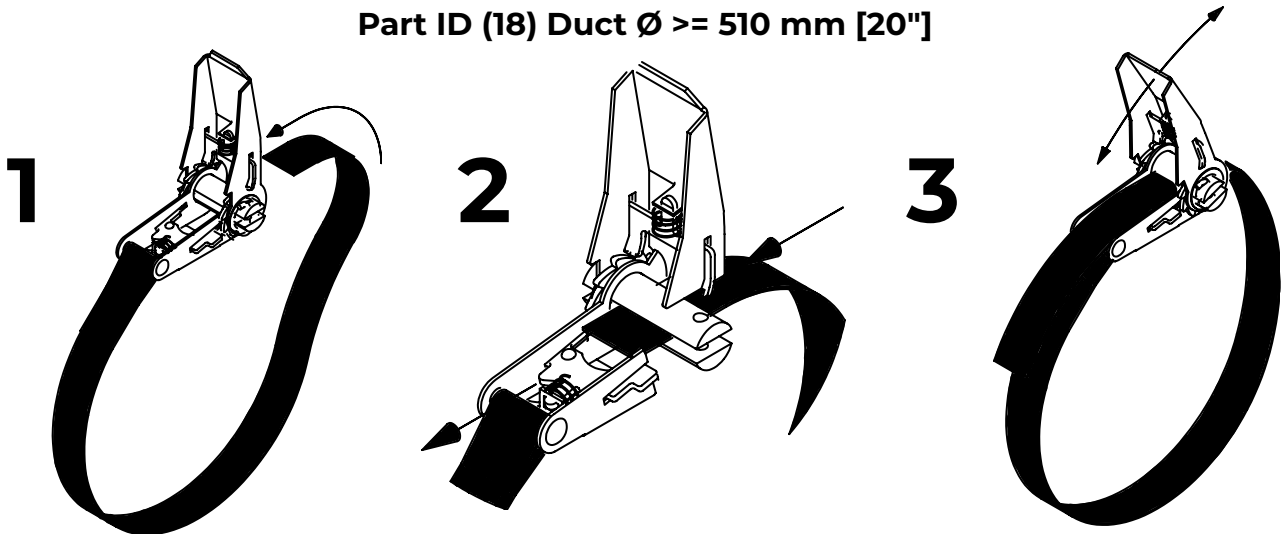

4.3 Installation of duct on cable

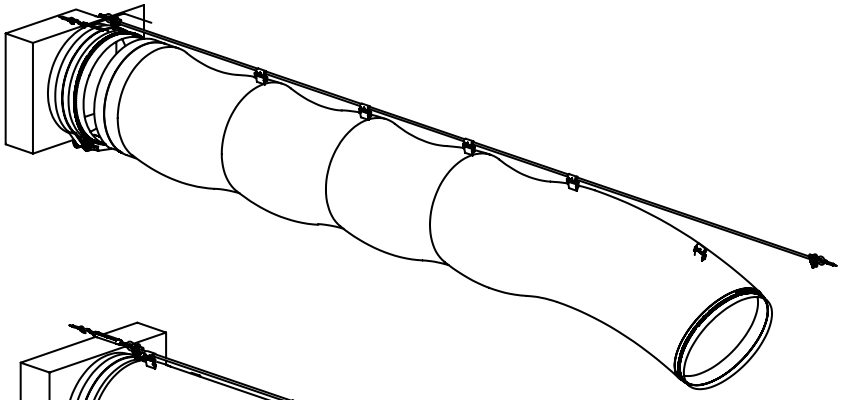

1

Hang ducting first

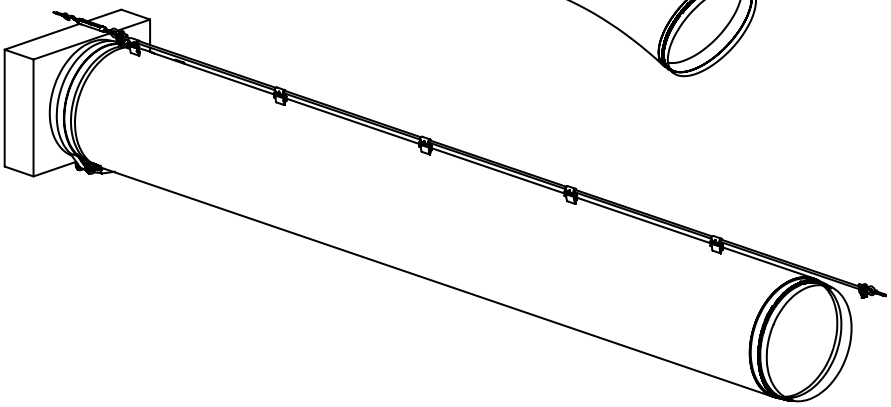

2

Stretch the duct

3

Hang endcap on the cable

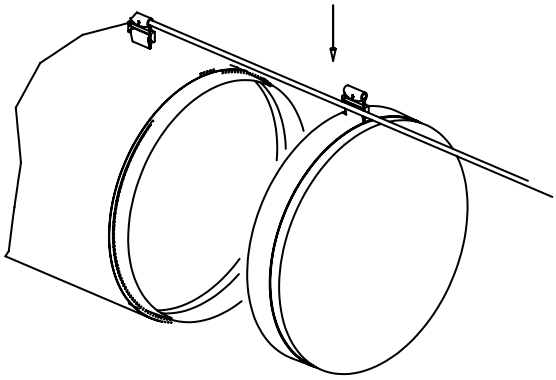

4

Slide endcap to the end of the duct. Zip it

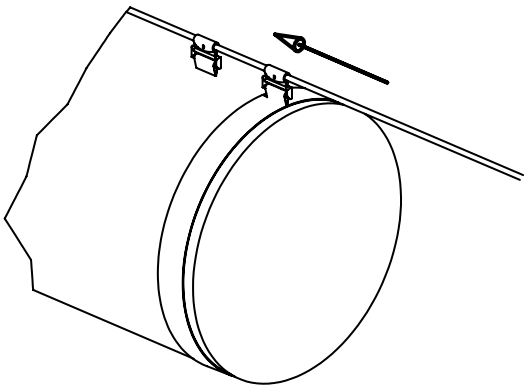

* Secure duct when fully extended with cable locks as slide stops to ensure best aesthetics

4.4 Taut Endcap installation

Video

1

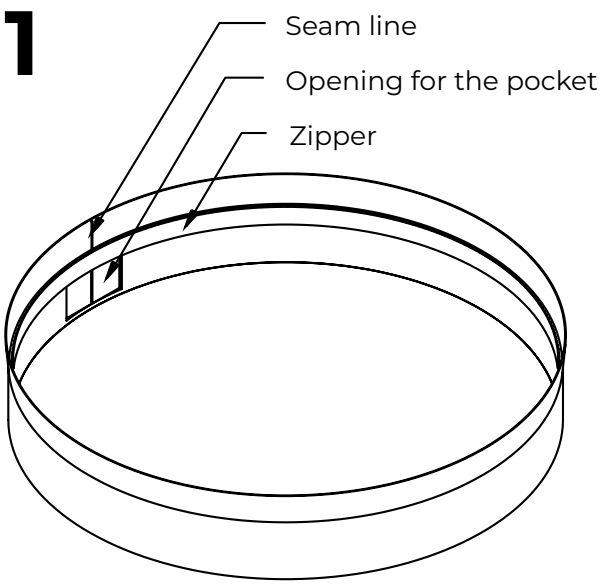

Lay the end cap flat on a clean surface

2

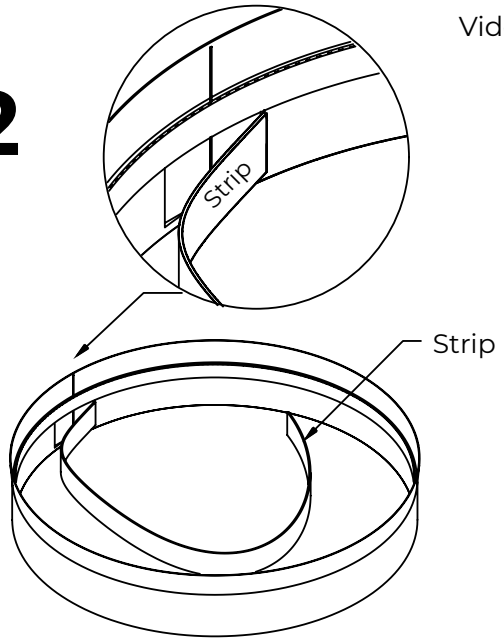

Insert the strip in the pocket all around the endcap

3

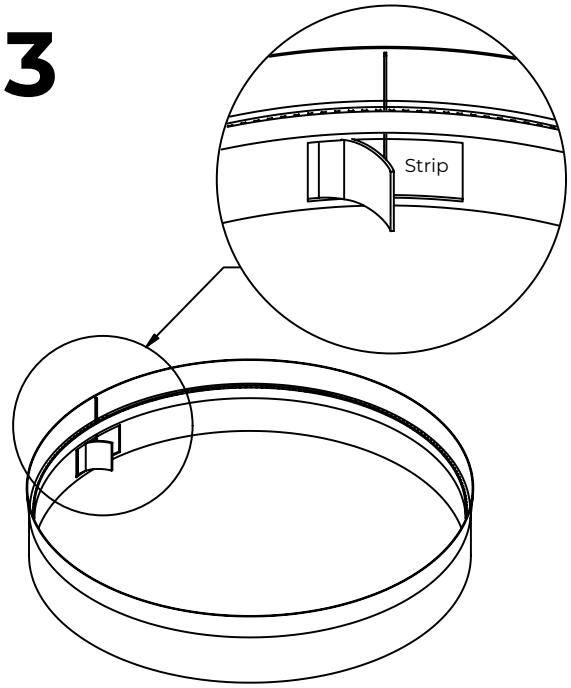

Align one end of the strip with the seam line

4

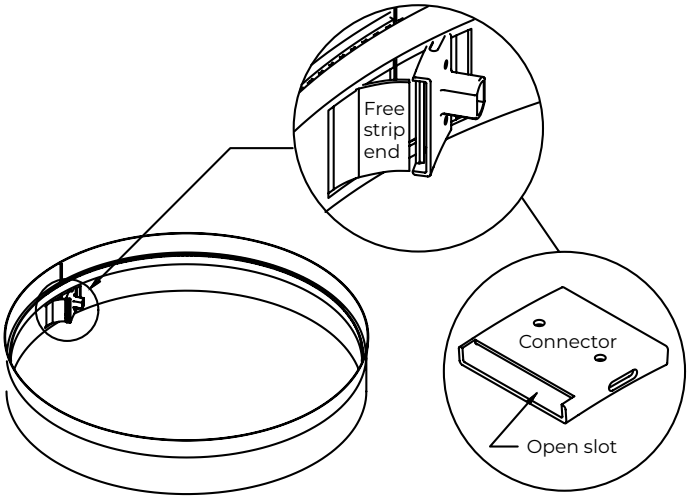

Put connector on the aligned strip end with the open slot towards the free strip end

5

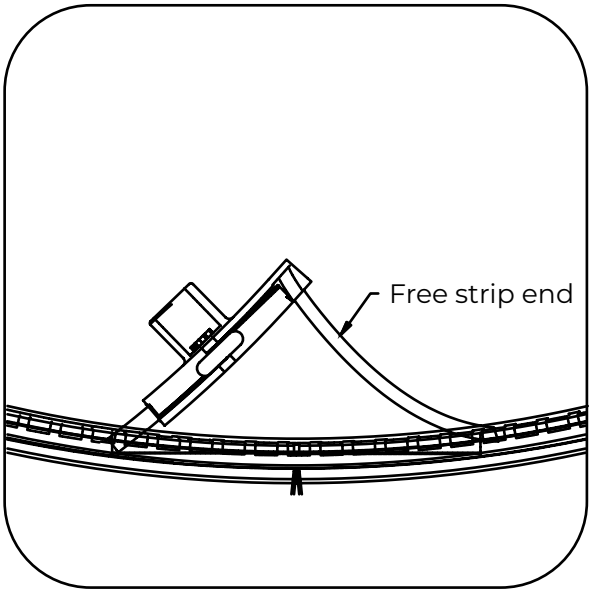

Place the free strip end in the open slot

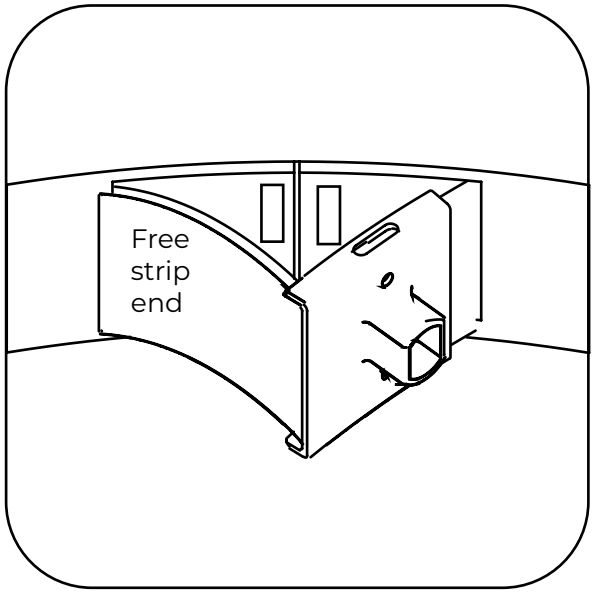

Hold the connector and the free strip end together and push until both strip ends are aligned

6

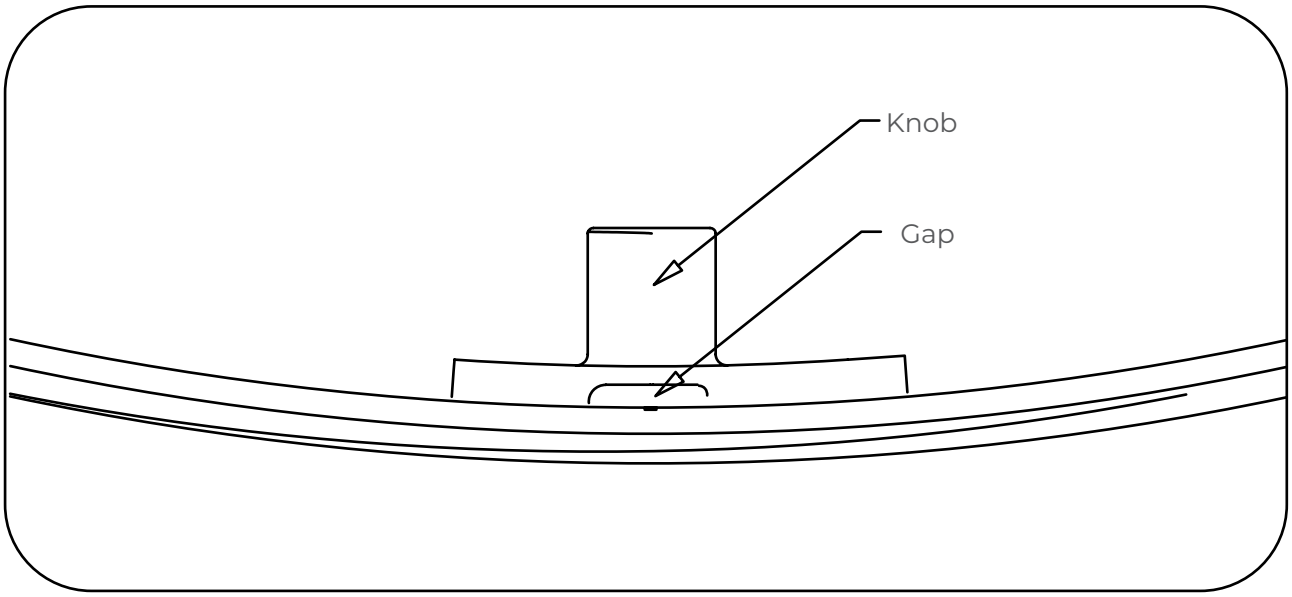

Using the knob, slide the connector and make sure the gap between both strip ends is in the center of the connector

smart air
solutions.

fabricair.com/contacts

All rights reserved to FabricAir®, 2024.
The latest version can be downloaded from fabricair.com
210104161-017 (2024-MAR ENG)