FabricAir

Type 03

Installation Manual

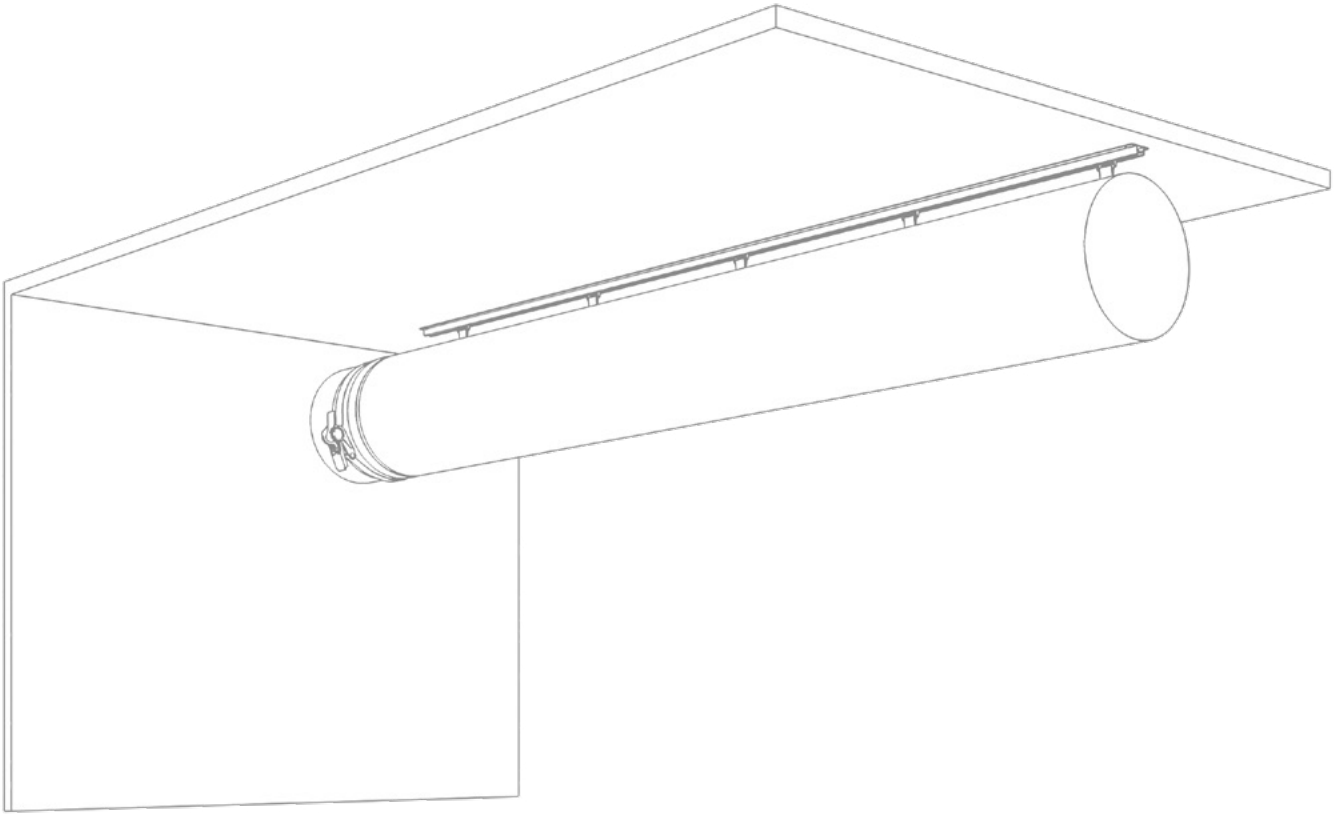

Type 03 suspension is compatible with classic, All-in-One, and Internal 360° Hoops ducts. T-Rail attached directly to any type of flat ceiling.

Type 03 provides closest distance between top of duct and ceiling.

Animation

Content

1.0 OPENING PACKAGE 3

1.1 Understanding components table 4

1.2 Type 03 suspension components 5

2.0 SUSPENSION INSTALLATION 6

2.0 Suspension installation 6

2.1 Mounting T-Rail 6

2.2 Mounting T-Rail for branches 8

2.3 Branches 9

2.4 Detailed suspension installation 10

3.0 SHAPE RETAINING HARDWARE 11

3.1 All-in-One 11

3.2 Internal 360° Hoops assembly 12

3.3 Internal 360° Hoops dissasembly 13

4.0 INSTALLATING THE FABRIC 14

4.1 Connection to sheet metal part with fixing strap 14

4.2 Fixing straps 14

4.3 Installation of duct on T-Rail 15

4.4 Taut Endcap installation 16

1.0 OPENING PACKAGE

Video

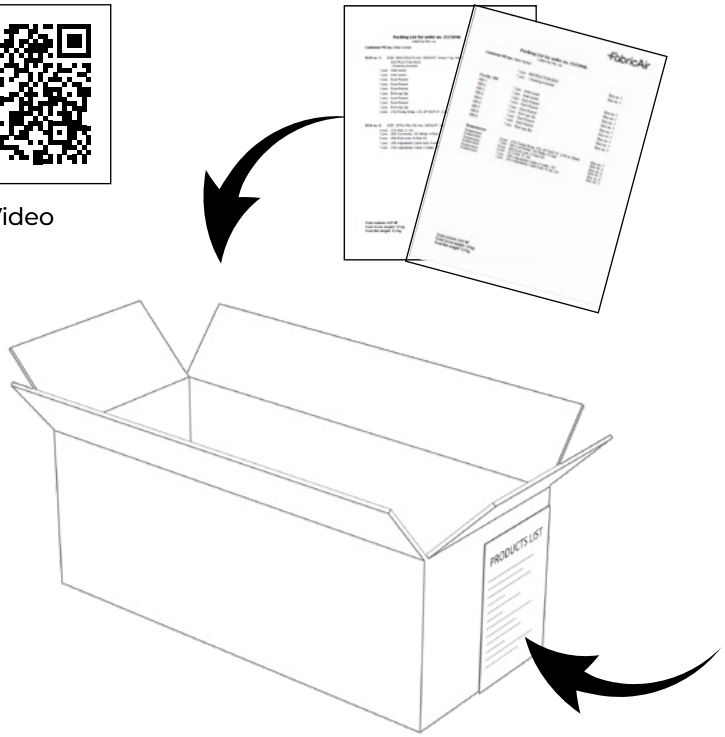

Box 1 includes all project documentation:

- System Drawing(s)
- Installation Guide
- Packing List (by box)
- Packing List (by positions)

Box number and contents list visible on external box label.

ORDER NO : 1473677 FabricAir

Contents of box NO. 1/2:

Instruction bag	1 pcs
Drawing included	1 pcs

Distribution Ducts

Tag. no. 100.1 Inlet
Tag. no. 100.2 Inlet

Suspensions

(05) Stretcher
(14) Cable lock
(18) Fixing

FabricAir

Packing List for order no. 1572946
Listed by Pos. no.

Customer PO no.: Nate Verbal

	1 pcs	INSTRUCTION BAG	Box no. 1
	1 pcs	- Drawing included	Box no. 1
Pos No. 100			
100.1	1 pcs	Inlet round	Box no. 1
100.2	1 pcs	Inlet round	Box no. 1
100.3	1 pcs	Duct Round	Box no. 1
100.4	1 pcs	Duct Round	Box no. 1
100.5	1 pcs	Duct Round	Box no. 1
100.6	1 pcs	End cap Zip	Box no. 1
100.7	1 pcs	Duct Round	Box no. 1
100.8	1 pcs	Duct Round	Box no. 1
100.9	1 pcs	End cap Zip	Box no. 1
Suspensions			
Suspension	2 pcs	(18) Fixing Strap, Y/Z, Ø710/27.9°, 2,46 m, Black	Box no. 1
Suspension	1 pcs	(06) Connector, SS Metal, H-Rail	Box no. 2
Suspension	6 pcs	(08) End Lock, H-Rail SS	Box no. 2
Suspension	4 pcs	(21) Rail, H, 2m	Box no. 2
Suspension	7 pcs	(38) Adjustable Cable 2 meter, SS	Box no. 2
Suspension	7 pcs	(36) Adjustable Cable lock, H-rail, SS	Box no. 2

Total volume: 0.07 M³
Total Gross weight: 12 kg
Total Net weight: 9.3 kg

FabricAir

Packing List for order no. 1572946
Listed by Box no.

Customer PO no.: Nate Verbal

BOX no. 1: SIZE: 590x210x275 mm, WEIGHT: Gross 7 kg. Net 5.9 kg.

	INSTRUCTION BAG	
	- Drawing included	
1 pcs	Inlet round	Tag No. 100.1
1 pcs	Inlet round	Tag No. 100.2
1 pcs	Duct Round	Tag No. 100.3
1 pcs	Duct Round	Tag No. 100.4
1 pcs	Duct Round	Tag No. 100.5
1 pcs	End cap Zip	Tag No. 100.6
1 pcs	Duct Round	Tag No. 100.7
1 pcs	Duct Round	Tag No. 100.8
1 pcs	End cap Zip	Tag No. 100.9
2 pcs	(18) Fixing Strap, Y/Z, Ø710/27.9°, 2,46 m, Black	Suspension

BOX no. 2: SIZE: 2070x150x100 mm, WEIGHT: Gross 5 kg. Net 3.45 kg.

4 pcs	(21) Rail, H, 2m	Suspension
1 pcs	(06) Connector, SS Metal, H-Rail	Suspension
6 pcs	(08) End Lock, H-Rail SS	Suspension
7 pcs	(36) Adjustable Cable lock, H-rail, SS	Suspension
7 pcs	(38) Adjustable Cable 2 meter, SS	Suspension

Total volume: 0.07 M³
Total Gross weight: 12 kg
Total Net weight: 9.3 kg

- There are two packing lists – by box and by position. Each box may contain either suspension components or ducting. Each duct section/component has a Tag number (Tag No. XXX.X). Suspension elements have part ID numbers. Example: (21) T-Rail, 2 m. In this case, (21) is part ID.
- Tag numbers are marked in assembly sequence. Assembly of ducting should start with Tag No. XXX.1 and continue accordingly.

1.1 Understanding components table (located on system drawing)

COMPONENTS								
Tag#	Fabric	Color	Flow model			Suspension		
			Primary	Placement	Secondary	Type	Strap length	Material
350404600025	Combi 70	Black 3004			FabFlow		0	GV
100.1	Combi 70	Black 3004			FabFlow		0	GV
100.2	Combi 70	Black 3004	SonicFlow SonicFlow SonicFlow SonicFlow SonicFlow	2:00 3:00 4:00 5:00 6:00	FabFlow	Type 01 AiO	50 mm [2"]	GV

THE CHART SHOWN ABOVE IS AN EXAMPLE

Tag#: the unique number for that section, this is the identifying/unique number for that section.

Tag 3504..##..25: this part is the FabricAir flow straightener that helps manage turbulence and can be zipped into any joint.

Fabric: the fabric selected for this project.

Color: the color selected (standard meaning to select from the standard color chart for that fabric).

Flow model primary: primary dispersion method.

Placement: position of the holes; direction of airflow based on looking in the direction of airflow with the air hitting you from behind.

Flow model secondary: FabFlow for permeable fabrics.

Suspension type: the suspension model selected for the project.

Strap length: the length of the strap from the top of the duct to the suspension.

1.2 Type 03 suspension components (located on packing lists)

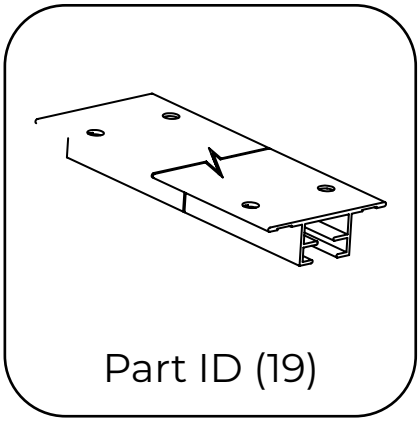

T-Rail profile

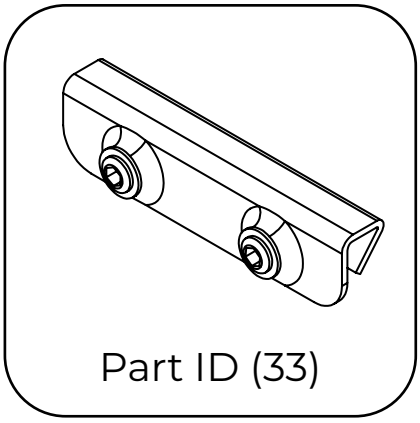

Connector for T-Rail

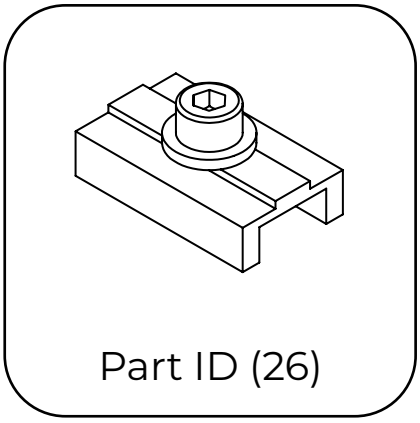

Profile lock for T-Rail

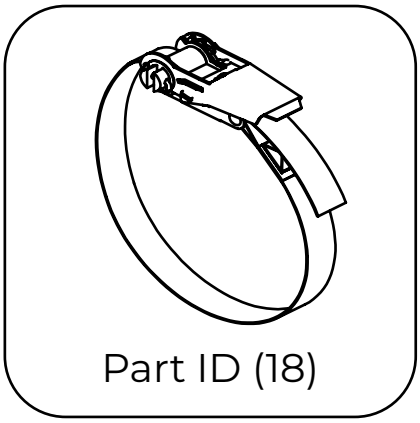

Fixing strap for duct
Ø > 508 mm [20"]

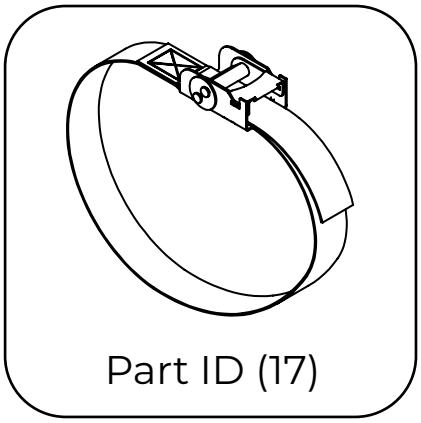

Fixing strap for duct
Ø < 508 mm [20"]

2.0 SUSPENSION INSTALLATION

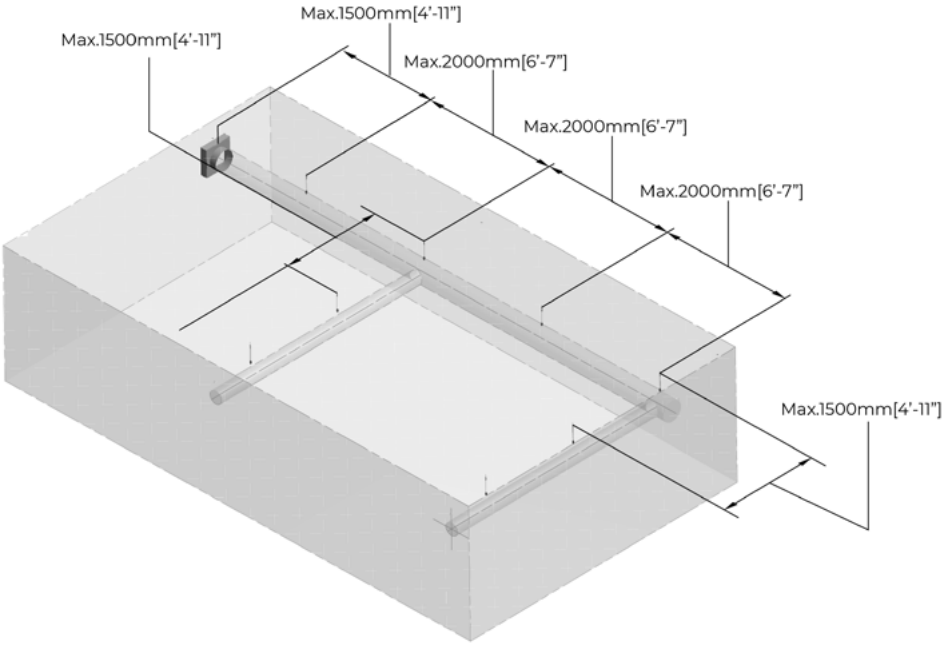

2.1 Mounting T-Rail

Video

- Connector for T-Rail shall be supplied by FabricAir.
- T-Rail is produced in 2 m sections.
- These suspension systems must be mounted flush to the ceiling. They cannot be suspended below the structure using T-Rail.

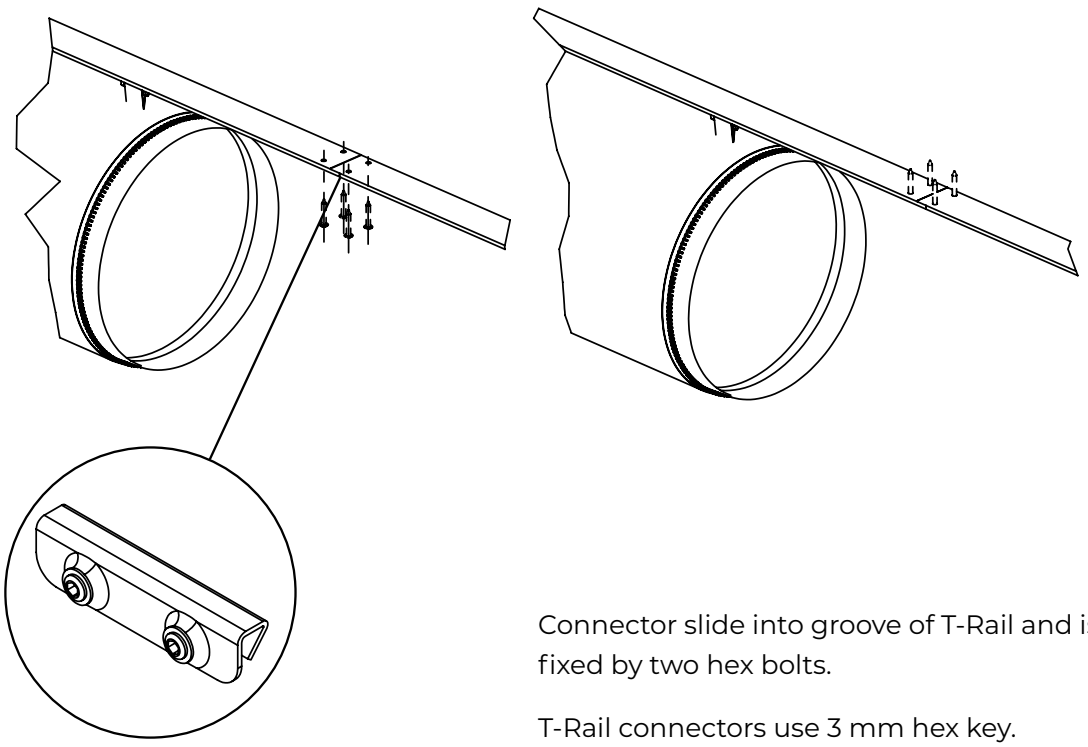

Connector slide into groove of T-Rail and is fixed by two hex bolts.

T-Rail connectors use 3 mm hex key.

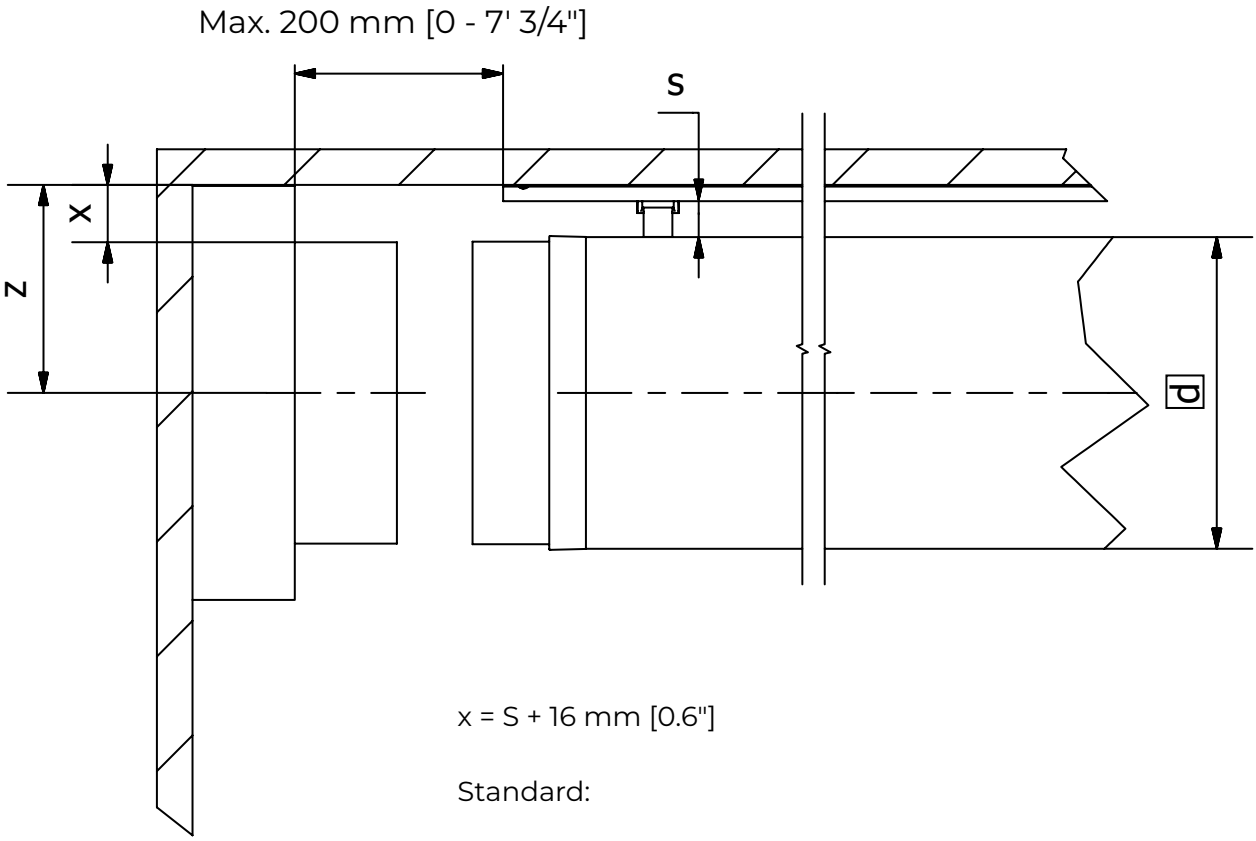

x = S + 16 mm [0.6"]

Standard:

S classic = 22,5 mm [0.9"]
S All-in-One = 42,5 mm [1.7"]
S Internal 360° = 42,5 mm [1.7"]
S RapidSlider = 17,5 mm [0.7"]

Z classic = 1/2d + 38,5 mm [1.5"]
Z All-in-One = 1/2d + 58,5 mm [2.3"]
Z Internal 360° = 1/2d + 58,5 mm [2.3"]
Z RapidSlider = 1/2d + 33,5 mm [1.3"]

Z RapidSlider and S RapidSlider remain constant for classic, All-in-One and Internal 360° Hoops.

Dimensions given in squares (□) can be found in system drawings packed in the shipping box.

Standard strap length for the 3 possible options:

classic: S = 22,5 mm [0.9"] minimum length;

All-in-One / Internal 360° Hoops: S = 42,5 mm [1.7"] minimum length.

Strap lengths may be extended on Type 03 suspension, as needed to allow ducts to hang more than 50 mm [2"] below rail.

- The T-Rail must be mounted along the centerline of the FabricAir system.
- Utilize chalk lines and/or lasers to ensure straight installation.
- T-Rails must be anchored to the structure using fasteners supplied by others.
- T-Rails are not pre-drilled, allowing for contractor flexibility in determining the best location for fastening to the structure.
- For maximum stability, T-Rails must be secured to the structure on both sides of each end, with a minimum of four fasteners per rail.
- T-rails can be cut to the desired length as necessary. However, as a best practice, ensure an additional length of 300 mm [12"] at the end of the run to accommodate for fabric expansion under pressure.
- These suspension systems must be mounted flush to the ceiling. They cannot be suspended below the structure using T-Rail.

2.2 Mounting T-Rail for branches

Video

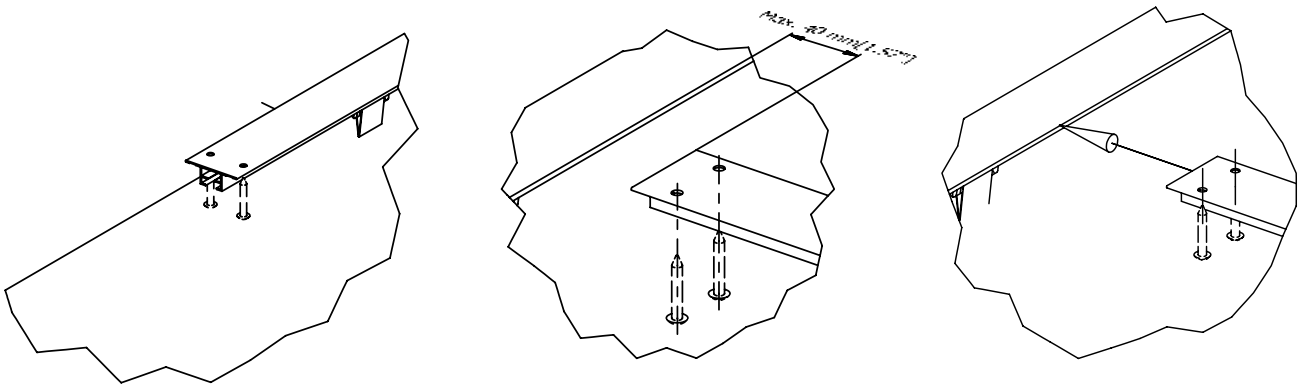

- Provision must be made to allow for the insertion of branch clips into the rail by incorporating an appropriate gap between the rails during installation. This will enable the seamless integration of the branch clips into the overall system, ensuring optimal performance.
- The system can be implemented within the T-Bar framework of suspended ceiling for types 03 and 04. The T-Rails should be securely affixed to the T-Bars at intervals of 600 mm [2'] or 1200 mm [4'] for optimal suspension.
- It is of paramount importance to ensure compliance with the weight load specifications of the suspended ceiling system prior to installation, as failure to adhere to these guidelines can result in structural integrity issues. Thus, it is essential to thoroughly review and verify the weight load capacity of the system to ensure safe and secure implementation.

2.3 Branches

Top aligned branch

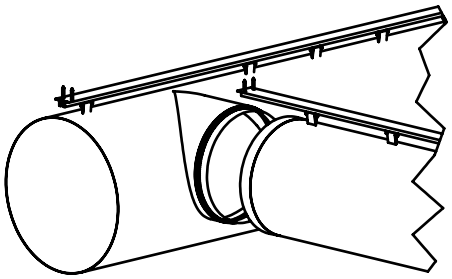

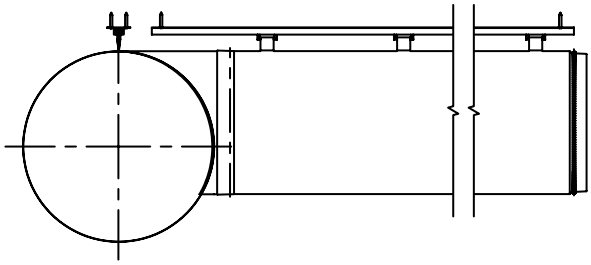

Middle aligned branch
with extended strap length

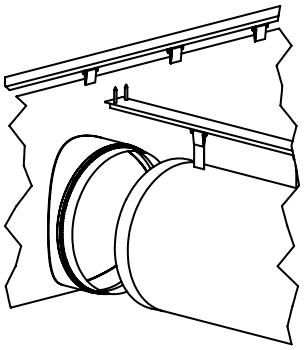

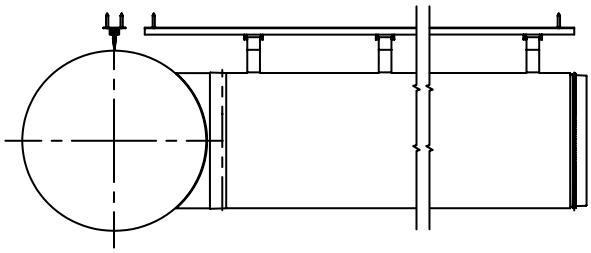

Bottom aligned branch
with extended strap length

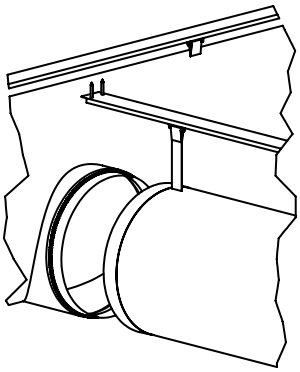

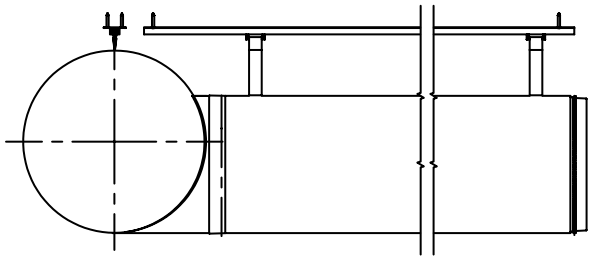

2.4 Detailed suspension installation details

Use QR code for more detailed information for each type.

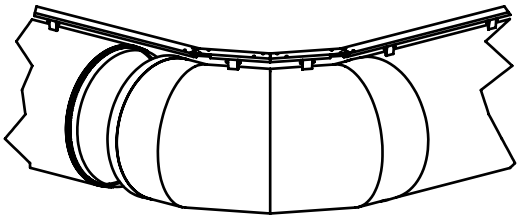

Bendings and elbows
All degrees and sizes

Drawings

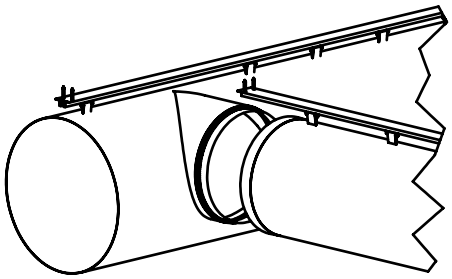

Branches
Top/center/bottom aligned

Drawings

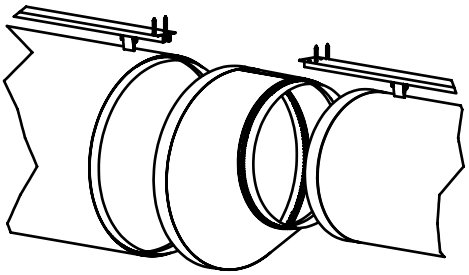

Reductions
Top/center/bottom aligned

Drawings

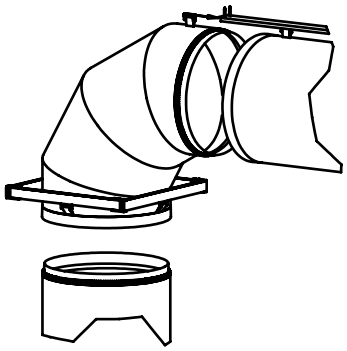

Vertical duct suspension methods

Drawings

3.0 SHAPE RETAINING HARDWARE

Shape retention solution for Type 03 suspension.

Standard All-in-One strap length = 50 mm [2"].

Comes pre-installed from the factory.

3.1 All-in-One

Video

Assembly

1

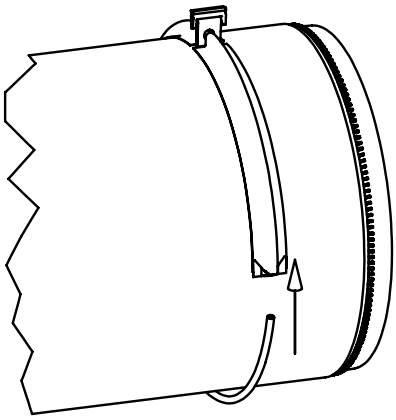

2

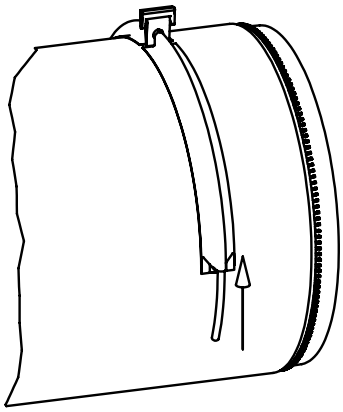

3

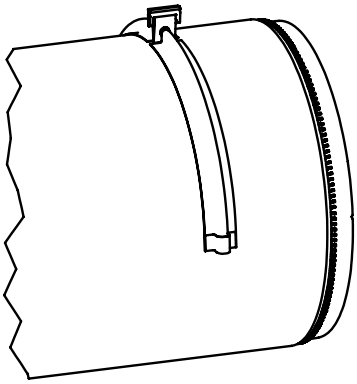

Disassembly

1

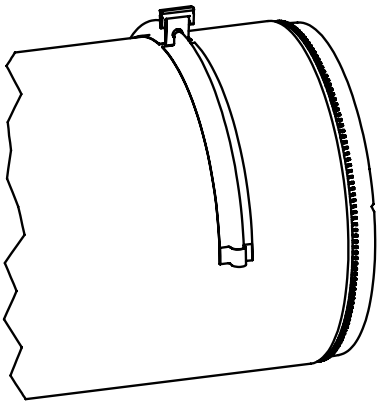

2

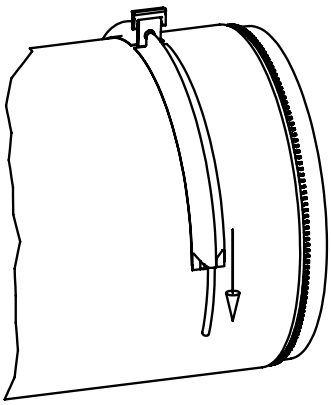

3

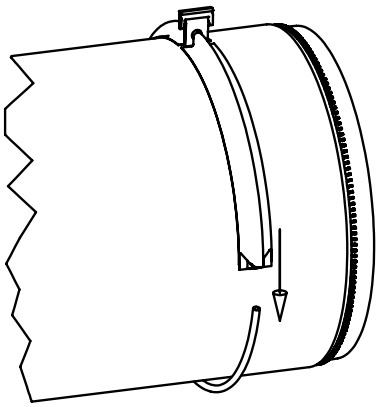

3.2 Internal 360° Hoops assembly

Optional shape retention solution for Type 03 suspension.

Standard Internal 360° Hoops strap length = 50 mm [2"].

Arrives from the factory: Ø ≤ 660 mm [26"]

Video

1

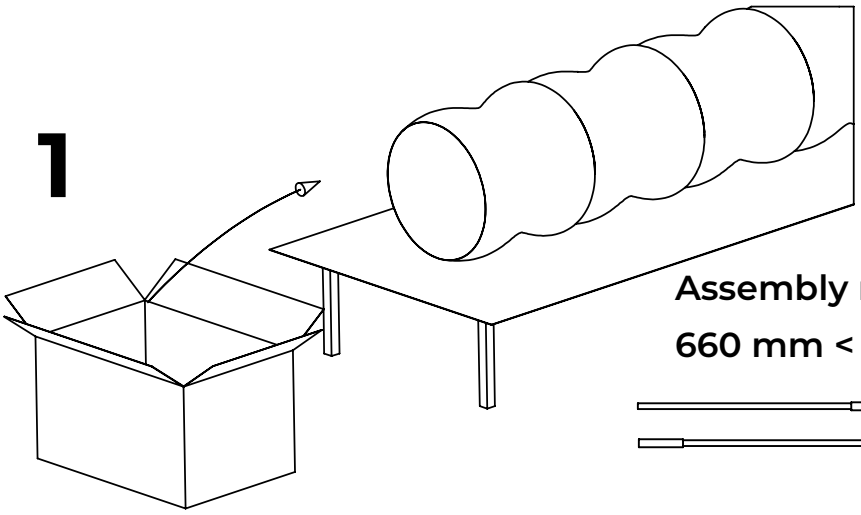

Assembly required in some cases:

660 mm < Ø < 1270 mm [26" < Ø < 50"]

2

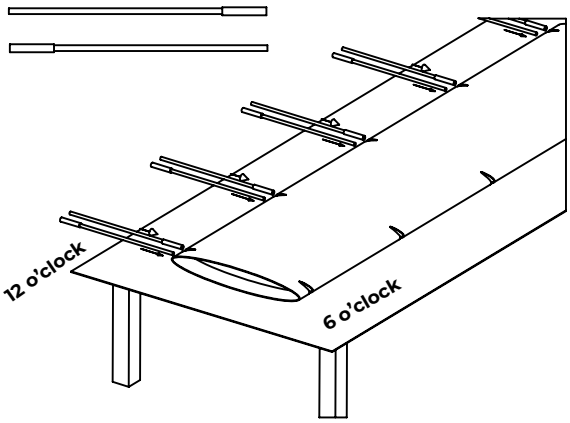

Connecting ends of hoops

3

12 o'clock

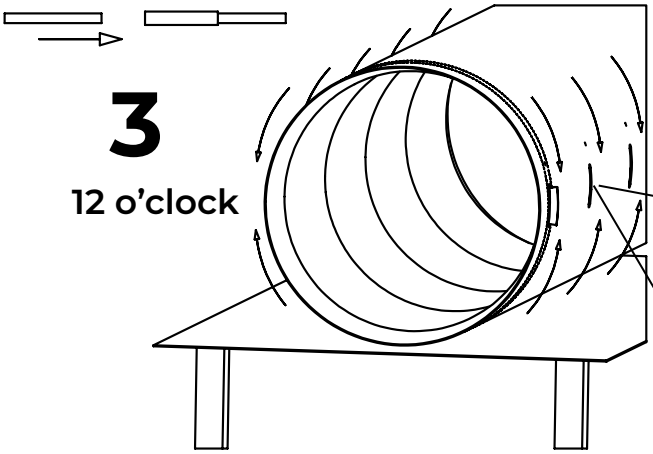

6 o'clock

5

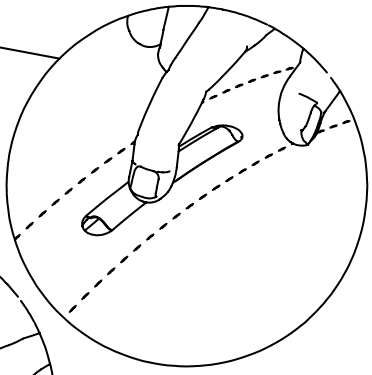

6 o'clock

4

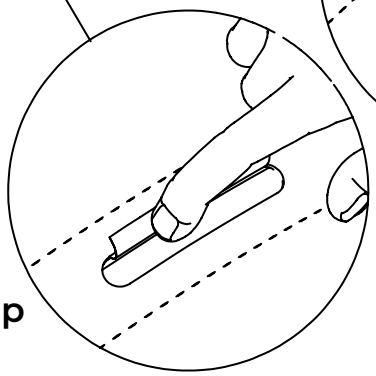

Small fabric flap for concealing hoop

3.3 Internal 360° Hoops disassembly

To remove the internal hoops, ensure that the connectors are arranged at 6 and 12 o'clock.

Rotate the duct to access the hoop through the slotted access hole at 6 o'clock.

Press down to flatten the connection point and slide rod out of metal sleeve.

Rotate duct to access 12 o'clock access slot and repeat to remove.

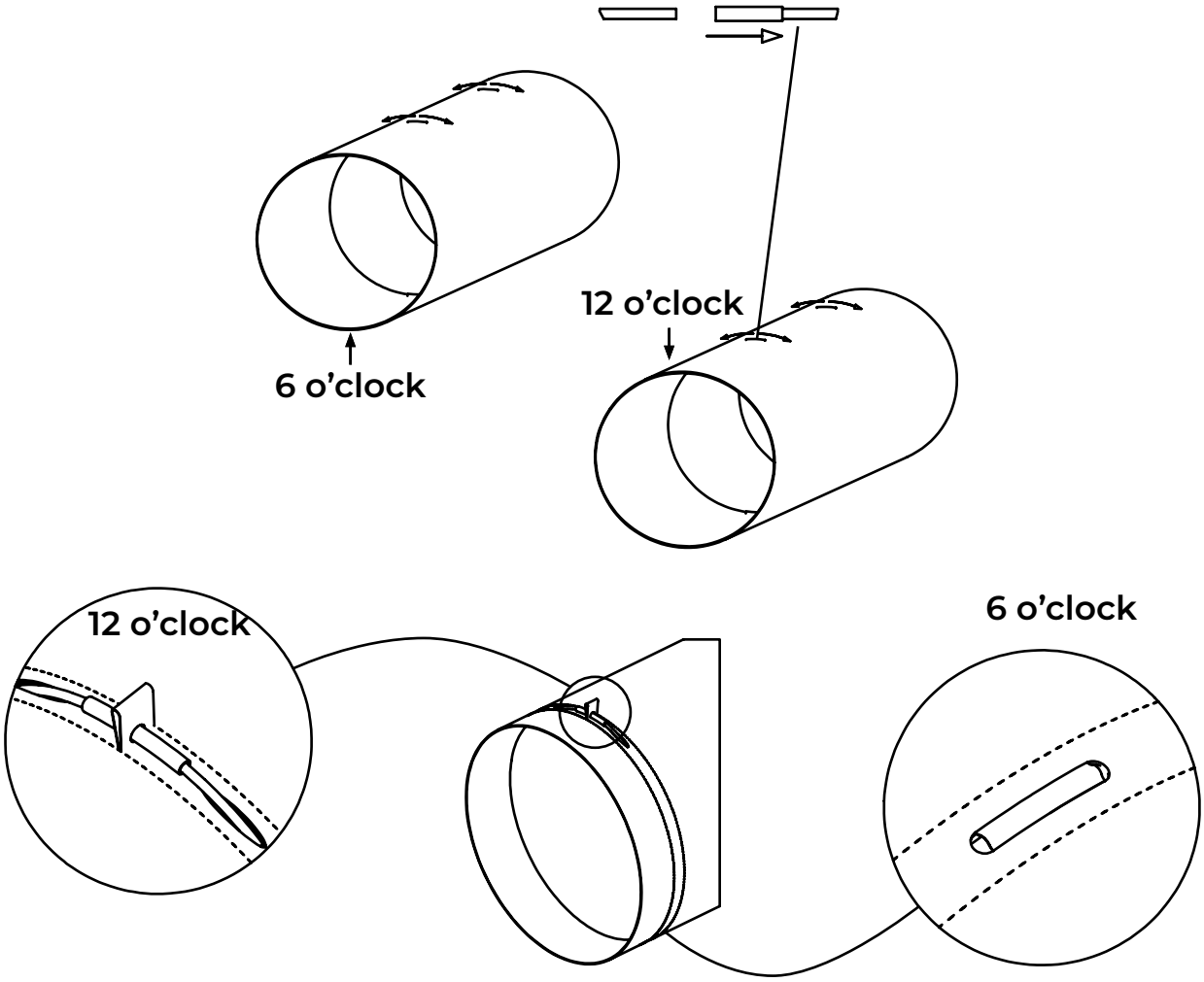

Deform circle to remove hoop.

While dismanteling hoops, keep hoop connector at the 12 o'clock.

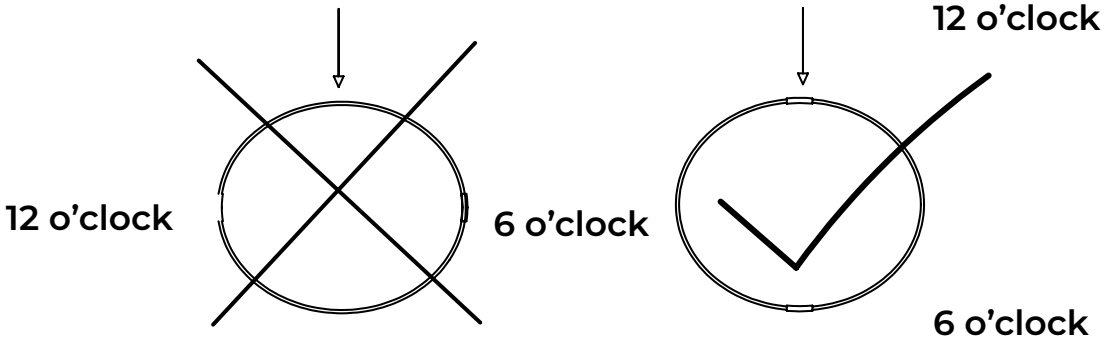

4.0 INSTALLING THE FABRIC

4.1 Connection to sheet metal part with fixing strap

	Basic inlet	Cover inlet	Smart inlet
Min. metal duct length required	50 mm [2"]	50 mm [2"]	75 mm [3"]
Inlet length	Min. 50 mm [2"] Std. 100 mm [4"]	Min. and std. 100 mm [4"]	Min. and std. 100 mm [4"]

Basic inlet

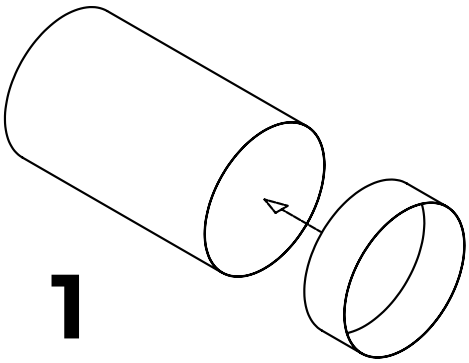

1

Put inlet on the duct

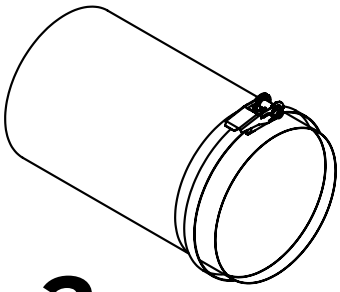

2

Put and tighten the fixing strap

Cover inlet

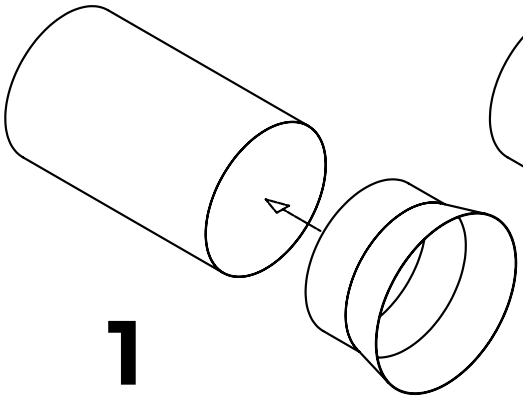

1

Put inlet on the duct

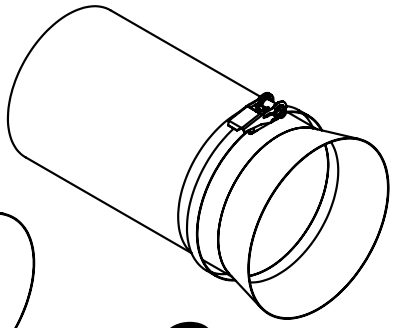

2

Put and tighten the fixing strap

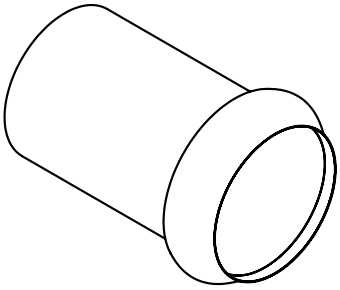

3

Close the cover

Smart inlet

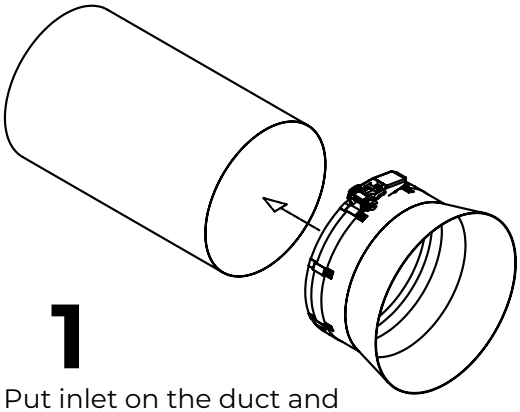

1

Put inlet on the duct and tighten the fixing strap

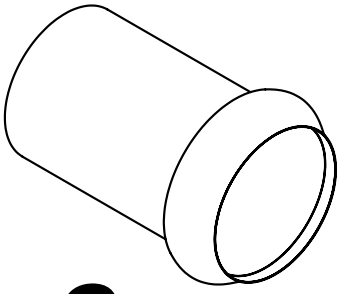

2

Close the cover

4.2 Fixing straps

Part ID (17) Duct Ø < 510 mm [20"]

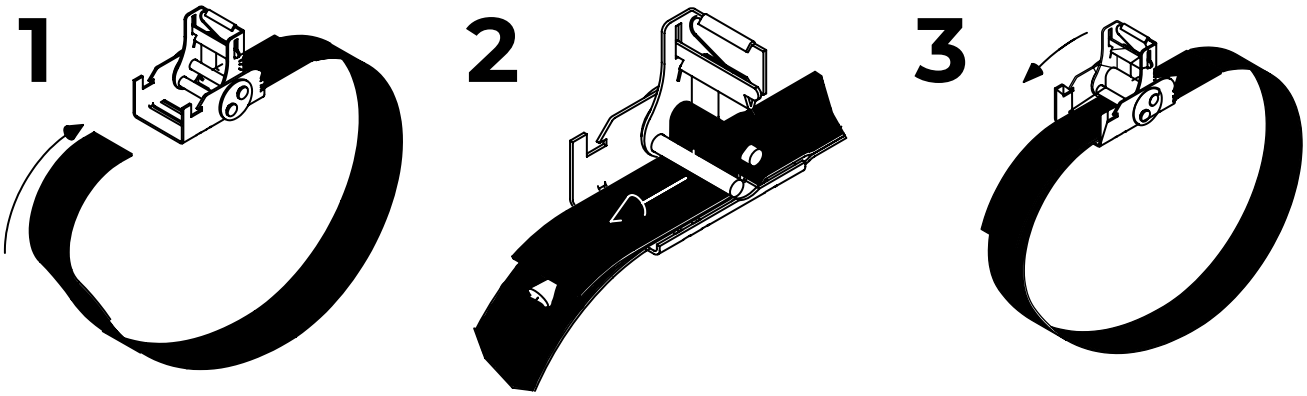

Part ID (18) Duct Ø >= 510 mm [20"]

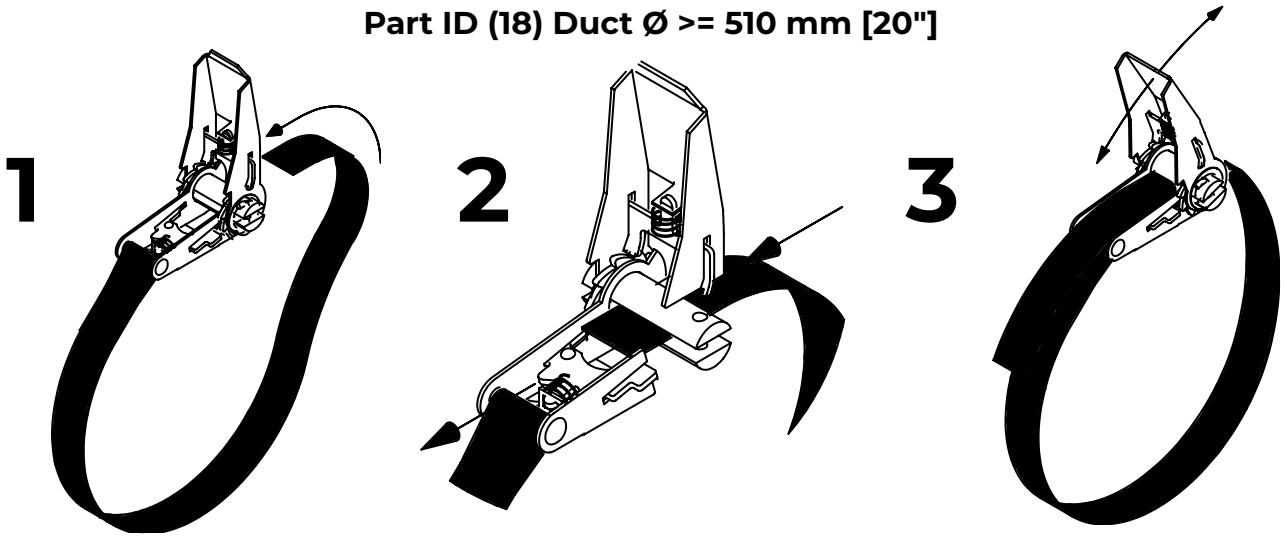

4.3 Installation of duct on T-Rail

Video

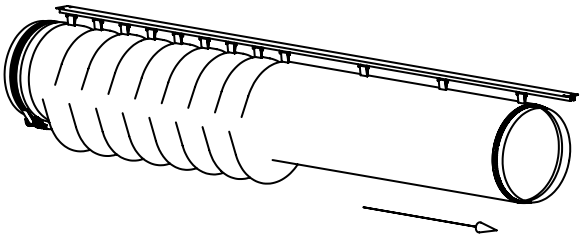

1

Hang ducting first

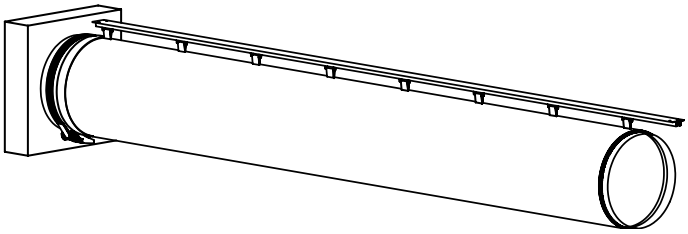

2

Stretch the duct

3

Hang endcap on the cable

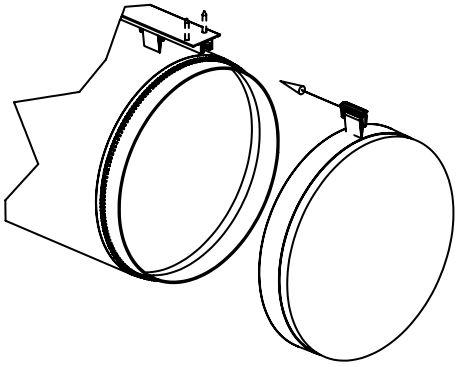

4

Slide endcap to the end of the duct. Zip it

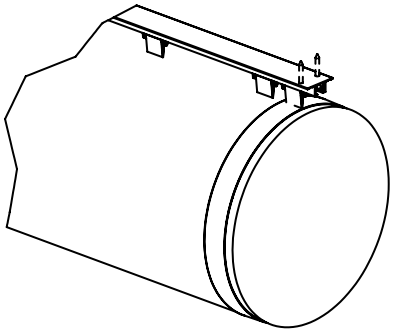

5

Secure duct by inserting profile lock

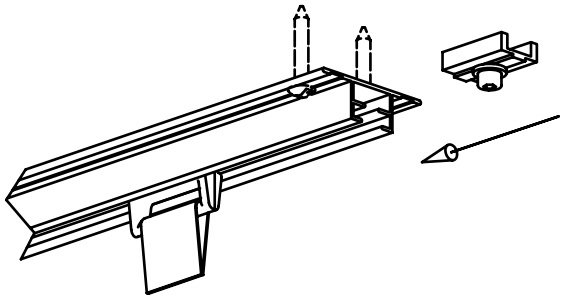

6

Fix profile lock by turning bolt clockwise

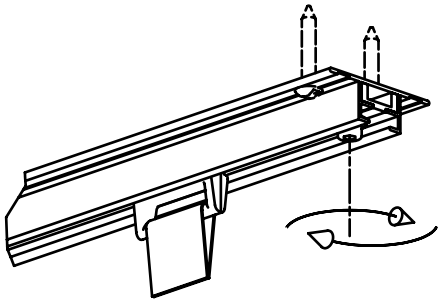

4.4 Taut Endcap installation

Video

1

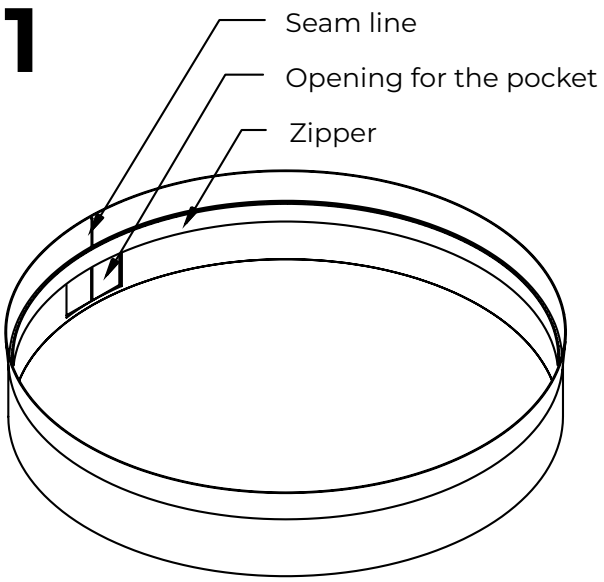

Lay the end cap flat on a clean surface

2

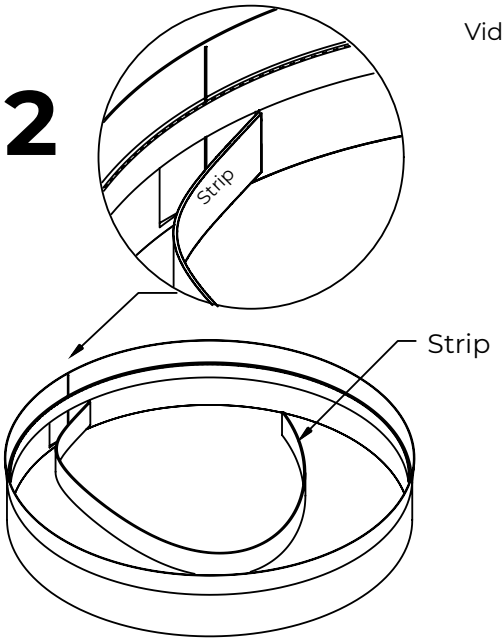

Insert the strip in the pocket all around the endcap

3

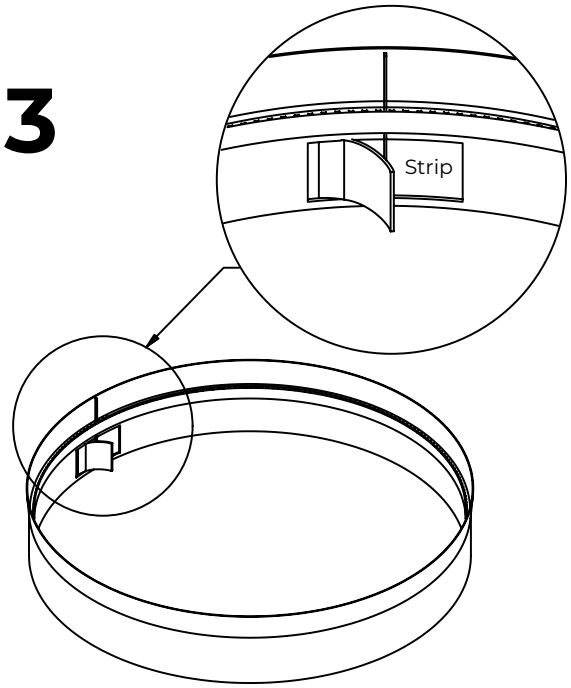

Align one end of the strip with the seam line

4

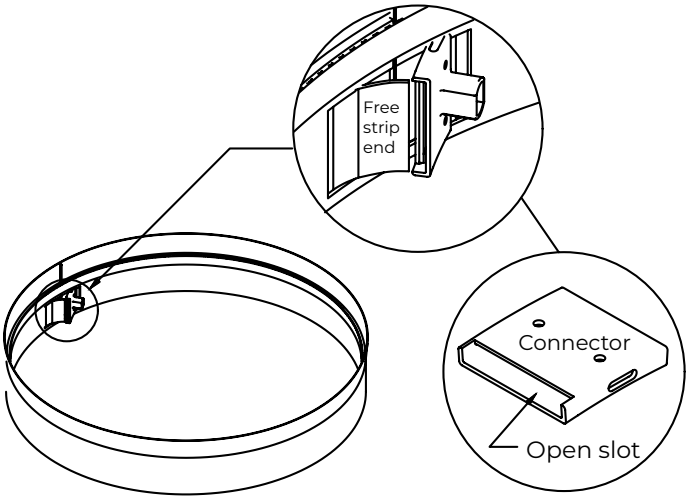

Put connector on the aligned strip end with the open slot towards the free strip end

5

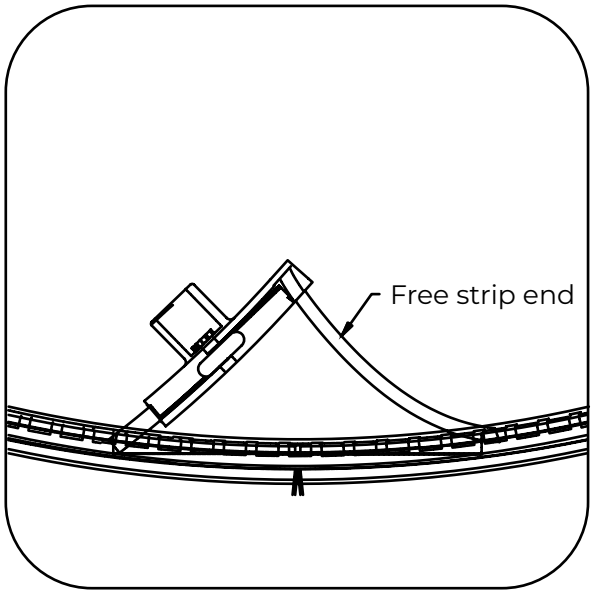

Place the free strip end in the open slot

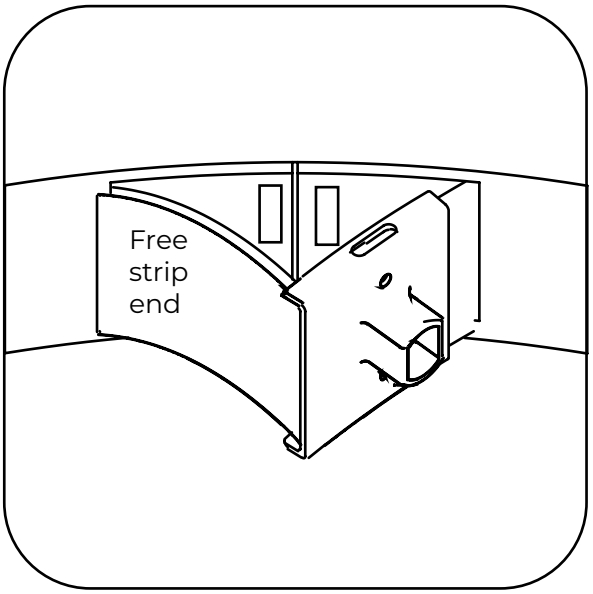

Hold the connector and the free strip end together and push until both strip ends are aligned

6

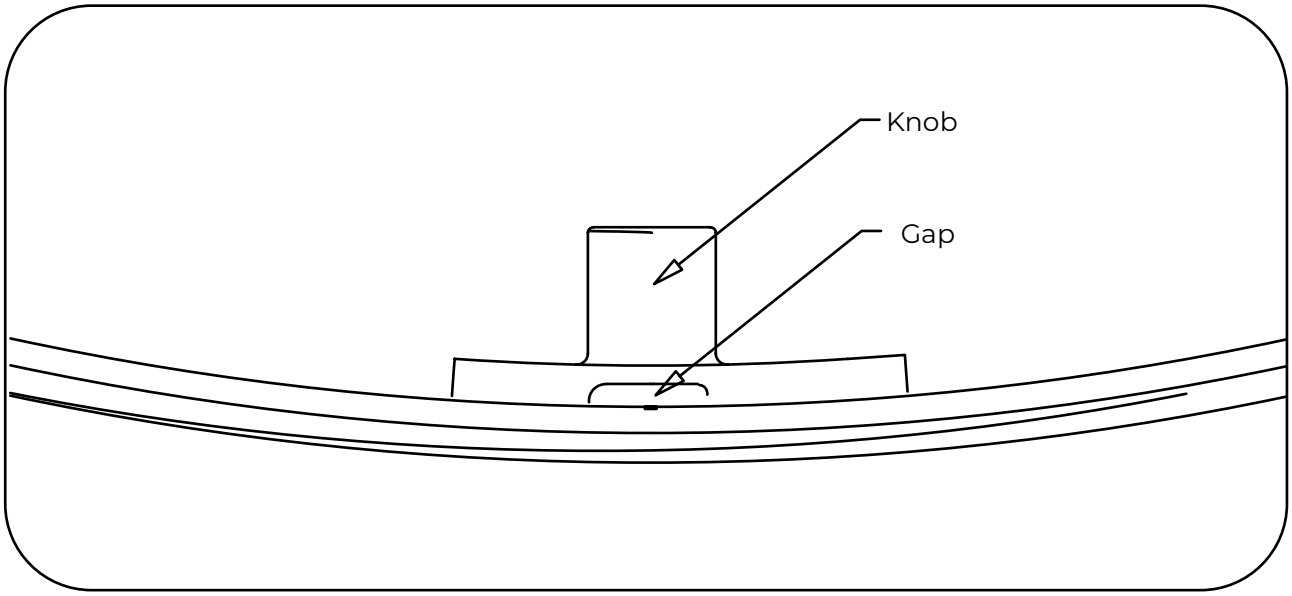

Using the knob, slide the connector and make sure the gap between both strip ends is in the center of the connector

210104163017001

fabricair.com/contacts

smart air
solutions.

All rights reserved to FabricAir®, 2024.
The latest version can be downloaded from fabricair.com
210104163-017 (2024-MAR ENG)